AGENDA ITEM or FINAL CONTRACT REVIEW SUBMITTAL FORM

Agenda Item: Contract Change Order No. One; AIP 3-08-0030-051-2

Action Requested: Board of County Commissioners' Signature

Parties to the Agreement: FAA, CDOT, United Companies, and Gunnison County

Term Begins: **Term Ends:** **Grant Contract #:** 3-08-0030-051-2017

Summary:

Change order No. 1 to the Scope of Work for the United Companies contract for the Runway Rehabilitation. Items have been removed for reason, changing the total amount of the project by less $835,963.94

Fiscal Impact: Original Contract total: $6,477,335.90, Revised Total: $5,641,371.96

Submitted by: Stephanie Williams **Submitter's Email Address:** swilliams@gunnisoncounty.org

Finance Review: (●) Required ( ) Not Required

Comments:
No concerns, total cost is decreasing. ln

Reviewed by: GUNCOUNTY1\lNienhueser Discharge Date: 9/13/2017

County Attorney Review: (●) Required ( ) Not Required

Comments:
ok db 9/15/17

Reveiwed by: GUNCOUNTY1\dBaumgarten Discharge Date: 9/15/2017 Certificate of Insurance Required Yes ( ) No (●)

County Manager Review:

Comments:

Reveiwed by: GUNCOUNTY1\jost Discharge Date: 9/15/2017

(●) Consent Agenda ( ) Regular Agenda ( ) Worksession Time Allotted: 0

Agenda Date: 9/19/2017

Revised April 2015

U.S. Department
of Transportation
**Federal Aviation
Administration**

Northwest Mountain Region
Colorado · Idaho · Montana · Oregon · Utah
Washington · Wyoming

Denver Airports District Office
26805 E. 68th Ave., Suite 224
Denver, CO 80249

August 21, 2017

Receivers 8/24/2017
File Copy Airs 1
Rmy.

Mr. Rick Lamport
Airport Manager
519 W. Rio Grande
Gunnison, Colorado 81230

Gunnison-Crested Butte Regional Airport
Gunnison, Colorado
AIP 3-08-0030-051-2016
Change Order No. One

Dear Mr. Lamport:

I have reviewed the subject Change Order and associated costs and documentation. I have determined that all of the additional contract items are eligible for AIP participation.

The following contract items are approved in the total amount of ($835,963.94) and no increase in contract time:

1. Schedule I –reduce crack seal, major crack repair, bituminous paving course, modified bituminous material and bituminous tack.
2. Schedule I –increase subgrade compaction and permanent pavement marking for blast pads.
3. Schedule IV- reduce the utility pothole for locating the high pressure gas line.

Please forward a copy of the executed change to my attention as soon as it is available. If you want signed copies for your, or the consultant files, please include the appropriate number of copies for signature. Your record drawings should indicate details addressed by this Change Order.

If you have questions, please call me at (303) 342-1255.

Sincerely,

Ronald F. Niehoff
Program Manager, DEN627
Denver ADO

cc: Jviation
Colorado Division of Aeronautics

U.S. DEPARTMENT OF TRANSPORTATION
FEDERAL AVIATION ADMINISTRATION

AIRPORT IMPROVEMENT PROGRAM

CONTRACT CHANGE ORDER NO. 1 **or** **SUPPLEMENTAL AGREEMENT NO.** N/A

AIRPORT Gunnison-Crested Butte Regional Airport **DATE** August 14, 2017

LOCATION Gunnison, Colorado **AIP PROJECT NO.** 3-08-0030-051-2017

CONTRACTOR Old Castle SW Group, Inc. dba United Companies

You are requested to perform the following described work upon receipt of an approved copy of this document or as directed by the engineer:

Schedule I: Runway 6/24 and Taxiway A (A1-A2) Rehabilitation					
Quantity Reconciliation					
Item No.	Description	Unit	Unit Price	Quantity	Amount
P-101c	Crack Seal	LF	$5.00	(15,979)	($79,895.00)
P-101d	Major Crack Repair	LF	$12.50	(26,617)	($332,712.50)
P-152b	Compacted Subgrade Preparation	SY	$32.00	63	$2,016.00
P-401a	Bituminous Paving Course	TON	$54.00	(4,565.66)	($246,545.64)
P-401b	Modified Bituminous Material	TON	$560.00	(269.93)	($151,160.80)
P-603a	Bituminous Tack Coat	GAL	$1.00	(26,841)	($26,841.00)
Additional Paint for Blast Pads					
P-620a	Permanent Pavement Marking	SF	$0.50	10,350	$5,175.00
Schedule IV: Taxiway Safety Area Grading Improvements					
P-101b	Utility Pothole	EA	$1,500.00	(4)	($6,000.00)

This Change Order Total	**($835,963.94)**
Original Contract Total	**$6,477,335.90**
Previous Change Order(s) Total	**$0.00**
Revised Contract Total	**$5,641,371.96**

The time provided for completion in the contract is unchanged. This document shall become an amendment to the contract and all provisions of the contract will apply. Changes are shown on Drawing(s) No. G008, G013, C301, C302, C350, C351, C600, C607, C702.

Recommended by: **8/14/2017**

Engineer — Date

Approved by:

Owner — Date

Accepted by: 9-5-17

Contractor — Date

Concurred by:

State Aeronautics (if applicable) — Date

Approved by:

Federal Aviation Administration — Date

NOTE: Change Orders and Supplemental Agreements require FAA approval prior to construction, otherwise no Federal participation can be granted. State Aeronautics concurrence is required when state participation is anticipated.

Certified current 5/16/2007

U.S. DEPARTMENT OF TRANSPORTATION
FEDERAL AVIATION ADMINISTRATION

AIRPORT IMPROVEMENT PROGRAM

CONTRACT CHANGE ORDER NO. 1 or SUPPLEMENTAL AGREEMENT NO. N/A

AIRPORT Gunnison-Crested Butte Regional Airport DATE August 14, 2017

LOCATION Gunnison, Colorado AIP PROJECT NO. 3-08-0030-051-2017

CONTRACTOR Old Castle SW Group, Inc. dba United Companies

You are requested to perform the following described work upon receipt of an approved copy of this document or as directed by the engineer:

Schedule I: Runway 6/24 and Taxiway A (A1-A2) Rehabilitation					
Quantity Reconciliation					
Item No.	Description	Unit	Unit Price	Quantity	Amount
P-101c	Crack Seal	LF	$5.00	(15,979)	($79,895.00)
P-101d	Major Crack Repair	LF	$12.50	(26,617)	($332,712.50)
P-152b	Compacted Subgrade Preparation	SY	$32.00	63	$2,016.00
P-401a	Bituminous Paving Course	TON	$54.00	(4,565.66)	($246,545.64)
P-401b	Modified Bituminous Material	TON	$560.00	(269.93)	($151,160.80)
P-603a	Bituminous Tack Coat	GAL	$1.00	(26,841)	($26,841.00)
Additional Paint for Blast Pads					
P-620a	Permanent Pavement Marking	SF	$0.50	10,350	$5,175.00
Schedule IV: Taxiway Safety Area Grading Improvements					
P-101b	Utility Pothole	EA	$1,500.00	(4)	($6,000.00)

This Change Order Total	**($835,963.94)**
Original Contract Total	**$6,477,335.90**
Previous Change Order(s) Total	**$0.00**
Revised Contract Total	**$5,641,371.96**

The time provided for completion in the contract is unchanged. This document shall become an amendment to the contract and all provisions of the contract will apply. Changes are shown on Drawing(s) No. G008, G013, C301, C302, C350, C351, C600, C607, C702.

Recommended by: **8/14/2017**

Engineer Date

Approved by:

Owner Date

Accepted by:

Contractor Date

Concurred by:

State Aeronautics (if applicable) Date

Approved by:

Federal Aviation Administration Date

NOTE: Change Orders and Supplemental Agreements require FAA approval prior to construction, otherwise no Federal participation can be granted. State Aeronautics concurrence is required when state participation is anticipated.

AIP PROJECT NO. 3-08-0030-051-2017 CHANGE ORDER NO. 1

AIRPORT Gunnison-Crested Butte Regional Airport LOCATION Gunnison, Colorado

JUSTIFICATION FOR CHANGE

1. Brief description of the proposed contract change(s) and location(s).

Schedule I

- Quantity Reconciliation – Throughout the project quantities had to be adjusted to coordinate with project needs. These quantities were tracked and will be a part of the record set of plans.

- Additional Painting for Blast Pads – The blast pads are in need of remarking have been added into the project.

Schedule IV

- Utility Pothole – Removed potholing on top of Xcel Energy high pressure gas line.

- Grading Changes – Removed grading above Xcel Energy high pressure gas line.

2. Reason(s) for the change(s) *(Continue on reverse if necessary)*

Schedule I

- Quantity Adjustments – The following quantities were adjusted for the following reasons:

  - **P-101c Crack Seal** – Crack seal was estimated based on the top lift of asphalt. Once the top lift was removed, it was determined less crack seal was needed.

  - **P-101d Major Crack Repair** – Major crack repair was anticipated based on estimates on the top surface, and the geotechnical investigation. Once the top lift was removed, major crack repair was limited in quantity.

  - **P-152b Compacted Subgrade Preparation** – Original estimates were based on the total area beneath pavement. In order to provide enough compaction, subgrade preparation was moved to 3' outside of the pavement section.

  - **P-401a Bituminous Paving Material** – Asphlat was estimated at 150 lbs per cubic foot. The mix design for the project was 145 lbs per cubic foot, with most of the construction averaging 141 lbs per cubic foot.

  - **P-401b Modified Bituminous Material** – Modified bituminous material was estimated at 6.5% of the P-401 quantity, the mix design was only 6.3%. Construction averages were 6.15% of modified bituminous material.

  - **P-603a Bituminous Tack Coat** – Bituminous tack was estimated at 0.15 gallons per square foot. The contractor placed it at a rate of 0.06 gallons per square foot.

- Additional Painting for Blast Pads – Upon discussions with the FAA and the Sponsor, it was determined that pavement markings should be added to the project.

Schedule IV

- Utility Pothole – Excel Energy did not require potholing to obtain depths of the high pressure gas line

- Grading Changes - Removing the grading over the Xcel Energy high pressure gas main will eliminate the need to coordinate with Xcel Energy. The portion of work associated with the gas main was becoming a risk to the project schedule and budget based on new information provided by Xcel Energy at the pre-construction meeting.

3. Justifications for unit prices or total cost.

   Unit costs for proposed improvements were included in the original project bid proposal.

4. The sponsor's share of this cost is available from:

   The funds for this change order are available from FAA Grant, State Grant, and Local Funds.

5. If this is a supplemental agreement involving more than $2,000, is the cost estimate based on the latest wage rate decision: Yes ☐ No ☐ Not Applicable ☒

6. Has consent of surety been obtained? Yes ☐ Not Necessary ☒.

7. Will this change affect the insurance coverage? Yes ☐ No ☒.

8. If yes, will the policies be extended? Yes ☐ No ☐.

9. Has this Change Order been discussed with FAA officials?
Yes ☒ No ☐ When April 6, 2017 With Whom Ron Niehoff

Comment _____

Submit 4 copies to the FAA

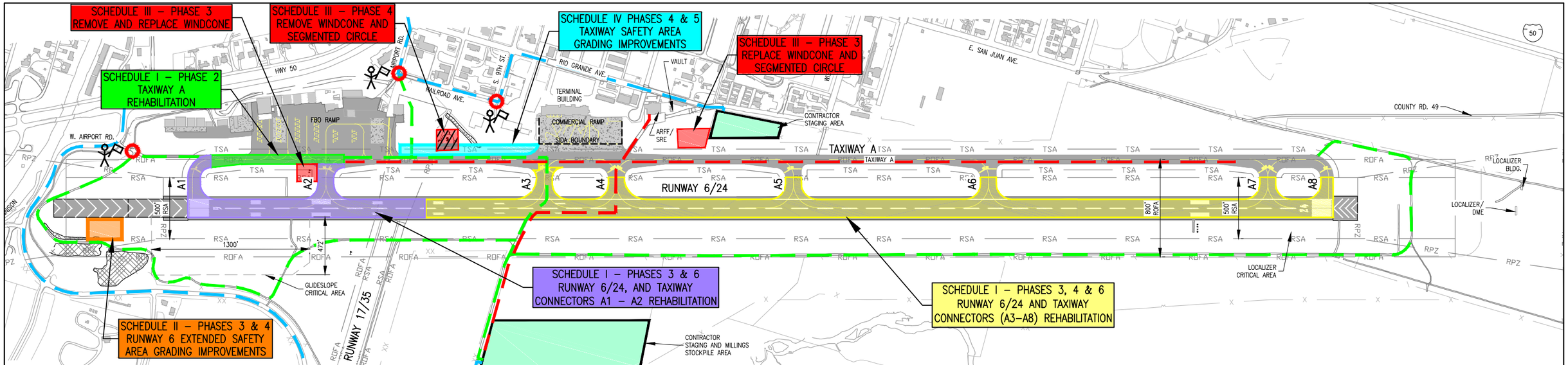

PHASING LEGEND

- FLAGGER
- AOA GATE ACCESS
- RUNWAY OR TAXIWAY CLOSURE MARKER
- TEMPORARY CONSTRUCTION MARKER PLACE 10 FEET OUTSIDE PHASE LIMITS OR AS DIRECTED BY ENGINEER.
- BUILDING
- CONTRACTOR STAGING/MATERIAL STORAGE AREA
- CONTRACTOR HAUL ROUTE
- AIRCRAFT TAXI ROUTE
- AIRPORT ACCESS ROUTE
- ARFF ROUTE
- X — CONSTRUCTION FLAGGING TAPE
- RSA — RUNWAY SAFETY AREA
- ROFA — RUNWAY OBJECT FREE AREA
- TSA — TAXIWAY SAFETY AREA
- TOFA — TAXIWAY OBJECT FREE AREA
- WETLAND

SCHEDULE	DURATION
NOTICE TO PROCEED	
2016 MOBILIZATION, CRUSHING – PHASE 1	60 CALENDAR DAYS
MOBILIZATION AND SCHEDULE I – PHASE 2	4/1/2017–4/9/2017
SCHEDULE I – PHASE 3	4/10/2017–5/15/2017
SCHEDULE I – PHASES 3 & 4	4/10/2017–6/20/2017
SCHEDULE I – PHASE 6 (NIGHT OPERATIONS)	9/1/2017–9/14/2017
SCHEDULE II – PHASES 3 & 4	4/10/2017–6/20/2017
SCHEDULE III – PHASES 3	4/10/2017–5/15/2017
SCHEDULE III – PHASES 4	5/16/2017–6/20/2017
SCHEDULE IV – PHASE 4 & 5	5/16/2017–7/20/2017

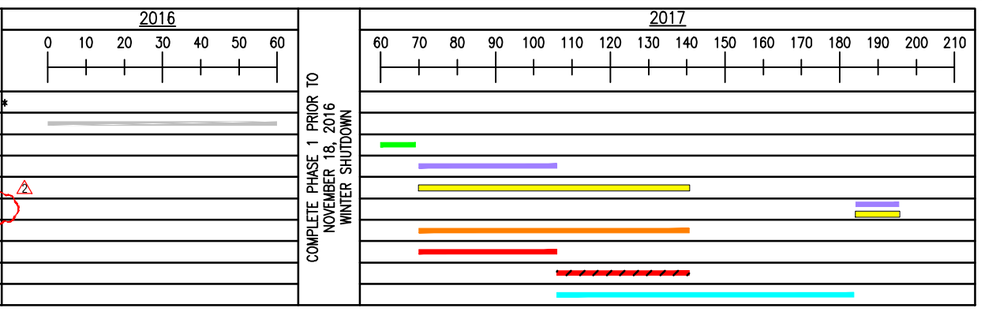

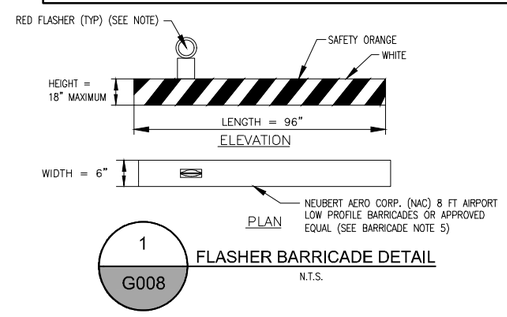

1 / G008 — FLASHER BARRICADE DETAIL

N.T.S.

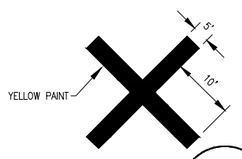

CONSTRUCT CLOSED TAXIWAY "X" WITH ANY OF THE FOLLOWING, SUBJECT TO APPROVAL BY ENGINEER: DOUBLE–LAYERED YELLOW SNOW FENCE, COLORED PLASTIC, PAINTED SHEETS OF PLYWOOD OR SIMILAR MATERIALS. CONTRACTOR TO ENSURE THAT MATERIALS ARE PROPERLY CONFIGURED AND SECURED TO PREVENT MOVEMENT FROM JET BLAST OR WIND.

2 / G008 — CLOSED TAXIWAY "X"

N.T.S.

NOTES:

1. FLASHERS TO BE SOLAR POWER OPERATED. LENS TO BE RED AND BE ABLE TO ROTATE 90°. NEUBERT AERO CORP. (NAC) – 360 DEGREE RED–TYPE D HAZARD SOLAR POWERED DUAL FUNCTION AND/OR APPROVED EQUAL BY ENGINEER AND AIRPORT.
2. FACING OF LOW–PROFILE BARRICADE TO BE COVERED WITH REFLECTIVE MATERIAL.
3. LOW–PROFILE BARRICADES TO BE PLACED WITH 10' INTERVALS, END TO END ALONG OPERATIONAL PAVEMENT, ADJACENT TO CONSTRUCTION, AS DIRECTED BY THE ENGINEER. BARRICADES TO BE PLACED IN LOCATIONS AS SHOWN ON PLANS AND AS DIRECTED BY THE FIELD ENGINEER THROUGHOUT THE PROJECT. FLASHER BARRICADES WILL BE REQUIRED ALONG THE EDGE OF ANY VERTICAL DROP OFF GREATER THAN 3". OPERATIONS WILL ISSUE A NOTAM TO ADVISE AIRCRAFT OF THIS CONDITION.
4. FLASHERS SHALL BE SECURED TO THE BARRICADES, AS APPROVED BY AIRPORT OPERATIONS. ALTERNATE FLASHER LENSES SO THAT EVERY OTHER LENS IS ROTATED 90°.
5. LOW–PROFILE BARRICADES SHALL BE OF LOW MASS, EASILY COLLAPSIBLE UPON CONTACT WITH AN AIRCRAFT OR ANY OF ITS COMPONENTS, AND WEIGHTED OR STURDILY ATTACHED TO THE SURFACE. IF AFFIXED TO THE SURFACE, THE BARRICADE MUST BE FRANGIBLE AT GRADE LEVEL OR AS LOW AS POSSIBLE, BUT NOT TO EXCEED 3 INCHES ABOVE THE GROUND. THE CONTRACTOR IS TO REPAIR ANY SURFACE DAMAGE IF BARRICADE IS AFFIXED TO THE SURFACE. NEUBERT AERO CORP. (NAC) 8 FT AIRPORT LOW PROFILE BARRICADES AND/OR APPROVED EQUAL BY ENGINEER AND HDN OPERATIONS COORDINATOR.
6. THE CONTRACTOR SHALL MAINTAIN ALL BARRICADES DURING DAYLIGHT HOURS. CONTRACTOR SHALL ALSO PROVIDE THE AIRPORT SPARE BATTERIES AND LIGHT BULBS FOR MAINTENANCE DURING NIGHTTIME HOURS.
7. IN THE SIDA AREA THE BARRICADES SHALL BE PLACED END TO END WITH NO GAPS, UNLESS TEMPORARY SECURITY FENCING IS PROVIDED.

RUNWAY CLOSURE PROCEDURE FOR NIGHT WORK

THE FOLLOWING PROCEDURE HAS BEEN ESTABLISHED FOR PREPARING FOR A NIGHT TIME RUNWAY CLOSURE AND FOR REOPENING THE RUNWAY THE NEXT MORNING.

1. HOLIDAY/OPERATIONAL RESTRICTIONS
   - A. RUNWAY NIGHT CLOSURES WILL NOT BE ALLOWED DURING THE FOLLOWING PERIODS:
     - JUNE 26 TO JULY 9, 2017
2. PREPARATION FOR NIGHT TIME CLOSURE
   - A. CONTRACTOR TO NOTIFY THE ENGINEER THAT A NIGHT TIME CLOSURE WILL BE REQUIRED WITH A MINIMUM NOTICE OF 24 HOURS
   - B. CONTRACTOR SHALL TAKE WEATHER FORECASTS INTO CONSIDERATION SO THAT ALL ANTICIPATED WORK CAN BE COMPLETED WITHIN THE ALLOCATED CLOSURE TIMES
   - C. ENGINEER SHALL COORDINATE WITH AIRPORT STAFF
   - D. GUC STAFF WILL ISSUE A NOTAM FOR THE RUNWAY CLOSURE
   - E. NIGHT TIME CLOSURES ARE LIMITED TO BETWEEN 10:00 PM AND 6:00 AM
   - F. MEET ONSITE 30 MINUTES PRIOR TO CLOSURE TO DISCUSS NIGHT WORK AND PREPARE FOR MOBILIZATION
2. ACCESS TO CLOSED RUNWAY
   - A. NO PERSONNEL, EQUIPMENT, OR MATERIAL WILL BE ALLOWED ON THE RUNWAY OR IN THE SAFETY AREA PRIOR TO 10:30 PM
   - B. GUC STAFF WILL NOTIFY THE ENGINEER THAT THE LAST FLIGHT HAS LANDED, THE RUNWAY IS CLEAR, AND THE NOTAM CLOSURE IS IN PLACE
   - C. ENGINEER WILL NOTIFY THE CONTRACTOR, WHO WILL PLACE THE LIGHTED X'S OVER THE RUNWAY NUMBERS ON BOTH ENDS
   - D. THE RUNWAY LIGHTS SHALL BE DEACTIVATED DURING THE CLOSURE PERIOD
   - E. THE CONTRACTOR WILL HAVE ACCESS TO THE ENTIRE RUNWAY AND SAFETY AREA DURING THE CLOSURE PERIOD
3. REOPENING A CLOSED RUNWAY
   - A. CONTRACTOR SHALL BE RESPONSIBLE FOR INSPECTING THE ENTIRE RUNWAY AND TAXIWAY SYSTEM TO ENSURE THAT FOD IS CLEANED UP
   - B. THE SAFETY AREA MUST BE GRADED TO MEET ALL SAFETY CRITERIA
   - C. ALL SURFACE MARKINGS SHALL BE COMPLETED PRIOR TO OPENING TO AIRFIELD TRAFFIC
   - D. INSTALL TAPERS, IF NECESSARY, AT DROPS IN PAVEMENT
   - E. REACTIVATE THE RUNWAY LIGHTS
   - F. CONTRACTOR TO REMOVE LIGHTED X'S PRIOR TO 5:30 AM
   - G. ALL PERSONNEL, EQUIPMENT, OR MATERIAL SHALL BE CLEAR OF THE RUNWAY AND THE SAFETY AREA PRIOR TO 5:30 AM
   - H. CONTRACTOR SHALL NOTIFY ENGINEER WHEN THEY ARE CLEAR OF THE RUNWAY PRIOR TO 5:30 AM
   - I. THE ENGINEER SHALL NOTIFY THE GUC STAFF THE RUNWAY IS CLEAR
   - J. GUC STAFF WILL INSPECT THE AIRFIELD PAVEMENT AND SAFETY AREA STARTING AT 5:30 AM
   - K. THE CONTRACTOR SHALL BE PRESENT DURING THE INSPECTION AND SHALL IMMEDIATELY REMEDY ANY SAFETY CONCERNS THAT GUC STAFF IDENTIFIES
   - L. GUC STAFF WILL CALL CLEAR THE RUNWAY FOR AIRFIELD TRAFFIC

GRAPHIC SCALE
400 0 400 800
(IN FEET)

SCHEDULE NOTES

1. TOTAL PROJECT CALENDAR DAY COUNT: 60 DAYS IN 2016 AND 125 DAYS IN 2017.
2. 2017 DAY PROJECT DAY COUNT WILL BEGIN 4/1/2017.
3. THE PROJECT DAY COUNT WILL BE SUSPENDED DURING THE WINTER SHUTDOWN.

ISSUED FOR CONSTRUCTION

THESE DRAWINGS ARE FOR CONSTRUCTION USE AND ARE NOT A RECORD SET AS DEFINED BY LAW. THE RECORD SETS ARE SIGNED AND SEALED BY:

NAME	REG. NO.	DATE
JESSE DARRELL ERICKSON	41675	8/1/2016

FOR AND ON BEHALF OF JVIATION , INC.

L:\GUC\GUC-51 Rnwy Rehab\CAD\PLANS\
G00-GUC-51-G008-PHAS.dwg
Layout: 8 PHAS 2017 - 24x36pm
Jesse.Erickson

JVIATION®

Gunnison Crested Butte REGIONAL AIRPORT

DES: T.A.R.
DR: L.O.B.
CH: C.L.G.
APP: J.D.E.

ISSUE RECORD

NO.	BY	DATE	DESCRIPTION
1	J.D.E.	8/1/2016	ISSUED FOR CONSTRUCTION
2	J.D.E.	8/1/2017	CHANGE ORDER NO. 1

REHABILITATE ASPHALT
RUNWAY 6/24

CONSTRUCTION SAFETY PHASING
OVERALL CONSTRUCTION AREAS
AND MISCELLANEOUS DETAILS

AIP PROJ. NO. 3-08-0030-51
JVIATION PROJ. NO. 2014.GUC.05

SHEET NAME G008
SHEET NO. 8 of 80

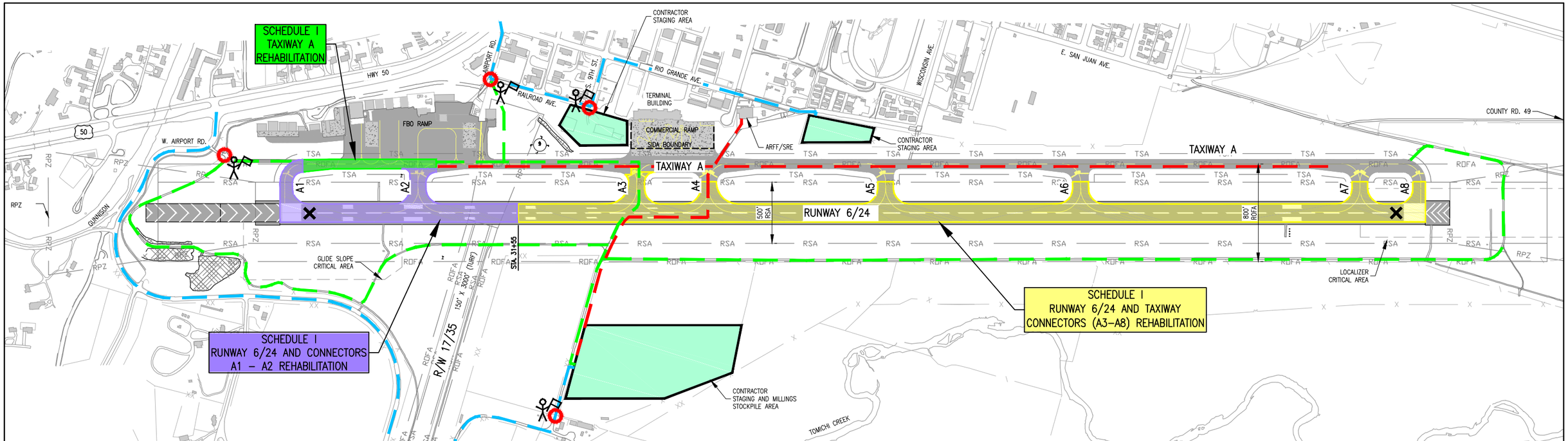

CONSTRUCTION PHASING NOTES

PHASE 6

SCHEDULE I. – PHASE 6

14 CALENDAR DAYS

ALL AIRPORT OPERATIONS AREAS SHALL REMAIN OPEN TO HELICOPTER OPERATIONS ON THE FBO RAMP AND UNAFFECTED DURING THIS PHASE WITH THE FOLLOWING EXCEPTIONS:

- RUNWAY 6/24 CLOSED FROM 10PM TO 6AM SEE SHEET NOTES G006 FOR RUNWAY CLOSURE PROCEDURE
- RUNWAY 17/35 CLOSED FROM 10PM TO 6AM SEE SHEET NOTES G006 FOR RUNWAY CLOSURE PROCEDURE 2
- LIMITED DAY TIME CLOSURES MAY BE REQUIRED TO ACCOMMODATE GROOVING NEAR RESIDENTIAL AREA AT TAXIWAY A6

MAJOR WORK TO BE COMPLETED

SCHEDULE I – PHASE 6

INSTALL AND MAINTAIN RUNWAY CLOSURE MARKERS
GROOVE RUNWAY
INSTALL FINAL PAVEMENT MARKINGS

PHASE NOTES

SCHEDULE I – PHASE 6

1. AIRFIELD SIGNS PROVIDING DIRECTIONS TO CLOSED AREAS SHALL BE COVERED. ALL AREAS CLOSED TO AIRCRAFT SHALL NOT BE LIGHTED. ADEQUATE LIGHTING, IN THE OPINION OF THE RESIDENT ENGINEER, SHALL BE PROVIDED TO DELINEATE THE ACTIVE AND CLOSED AREAS OF THE AOA. THE ABOVE ITEMS ARE CONSIDERED INCIDENTAL TO THE VARIOUS BID ITEMS. CONTRACTOR METHOD FOR COVERING OF LIGHTS AND SIGNS SHALL BE APPROVED BY ENGINEER. SHALL PREVENT DAMAGE TO THE EQUIPMENT AND SHALL BE SECURED TO PROTECT AGAINST JET BLAST AND MUD.

2. ALL COMPONENTS OF THE AIRFIELD LIGHTING SYSTEM OUTSIDE OF THE PROJECT AREA AND CLOSED PORTIONS OF THE AIRFIELD SHALL BE OPERATIONAL AT THE END OF EACH WORK SHIFT AND FOR EVERY PERIOD OF LOW VISIBILITY. THE CONTRACTOR SHALL BE RESPONSIBLE FOR PROVIDING ALL TEMPORARY JUMPER AND OTHER EQUIPMENT NECESSARY TO MAINTAIN AN OPERATIONAL SYSTEM DURING CONSTRUCTION. TEMPORARY JUMPERS SHALL BE CONSIDERED INCIDENTAL TO THE VARIOUS BID ITEMS. ALL TEMPORARY JUMPERS SHALL BE INSTALLED IN CONDUIT.

3. PRIOR TO BEGINNING ANY ELECTRICAL DEMOLITION THE CONTRACTOR SHALL PROVIDE A PLAN TO THE ENGINEER DETAILING THE INSTALLATION OF ALL REQUIRED TEMPORARY JUMPERS. THE PLAN SHALL SHOW THE LOCATIONS AND INSTALLATION TECHNIQUES OF ALL JUMPERS AND SHALL DEMONSTRATE TO THE ENGINEER THE CONTRACTOR'S PLAN TO MAINTAIN THE INTEGRITY OF THE AIRFIELD CIRCUITS FOR THE DURATION OF CONSTRUCTION.

IMPACTS ON OPERATIONS

1. NOTAMS WILL BE REQUIRED FOR ALL CLOSED AIRCRAFT OPERATING AREAS PRIOR TO CLOSURE. 48 HOURS ADVANCE NOTICE WILL BE GIVEN BY CONTRACTOR PRIOR TO CLOSURE.
2. THE CONTRACTOR SHALL GIVE RIGHT OF WAY TO ALL AIRCRAFT AND ARFF VEHICLES AT ALL TIMES.
3. THE CONTRACTOR SHALL MAINTAIN ARFF ACCESS TO THE RUNWAY AT ALL TIMES.
4. NO WORK, OPEN EXCAVATIONS, EQUIPMENT, STOCKPILES, OR PERSONNEL ARE ALLOWED IN THE SAFETY AREAS OR OBJECT FREE AREAS FOR ANY ACTIVE TAXIWAY OR SAFETY AREAS FOR AN ACTIVE RUNWAY WHEN THE AIRPORT IS OPEN.
5. ALL SAFETY AREAS AND OBJECT FREE AREAS FOR ACTIVE AIRPORT PAVEMENTS ARE OFF LIMITS TO THE CONTRACTOR WITHOUT PRIOR APPROVAL FROM AIRPORT OPERATIONS.
6. PRIOR TO OPENING A RUNWAY OR TAXIWAY, ALL EXCAVATIONS AND TRENCHES IN THE SAFETY AREAS SHALL BE BACKFILLED AND COMPACTED TO P-152 SPECIFICATIONS. GRADING WITHIN THE SAFETY AREA SHALL CONFORM TO AC 150/5300-13A, CHAPTER 3.
7. AIRPORT PERIMETER SECURITY SHALL BE MAINTAINED AT ALL TIMES DURING CONSTRUCTION. THE CONTRACTOR SHALL PROVIDE BADGED GATE GUARDS ALONG CONSTRUCTION ACCESS POINTS AT AIRPORT PERIMETER GATE LOCATIONS. GATES SHALL BE SECURELY CLOSED OR LOCKED AT ALL TIMES IF GATE GUARD IS NOT PRESENT OR GATES ARE NOT IN USE.
8. RUNWAY CLOSURE MARKERS SHALL BE INSTALLED ON RUNWAY 6/24. SEE SHEET G006 FOR ADDITIONAL INFORMATION. CONTRACTOR TO USE THE AIRPORT OWNED RUNWAY CLOSURE MARKERS (LIGHTED "X"). CONTRACTOR IS RESPONSIBLE FOR ALL COSTS TO FUEL THE LIGHTED X'S. SEE SHEET G006 FOR MORE INFORMATION.
9. ALL STOCKPILES OR EQUIPMENT ADJACENT TO OBJECT FREE AREAS SHALL BE MARKED AND LIGHTED PER AC 150/5370-2F.
10. THE CONTRACTOR SHALL PROVIDE A TRAFFIC CONTROL PLAN AND WORK PLAN FOR THIS SCHEDULE OF WORK.
11. THE CONTRACTOR SHALL HAVE A SWEEPER ON SITE AT ALL TIMES TO CLEAN DEBRIS FROM HAUL ROUTES, CONSTRUCTION ACCESS POINTS, OR AREAS ADJACENT TO CONSTRUCTION. THE CONTRACTOR SHALL CLEAN ANY DEBRIS FROM AIRFIELD PAVEMENTS A HALF HOUR PRIOR TO INSPECTION BY AIRPORT.
12. THE CONTRACTOR SHALL KEEP ALL CONSTRUCTION TRAFFIC LIMITED TO THE APPROVED HAUL ROUTES AS SHOWN ON THE PLANS OR AS APPROVED BY THE ENGINEER. THE CONTRACTOR IS RESPONSIBLE FOR ANY DAMAGE CAUSED ALONG THE HAUL ROUTES OR CONSTRUCTION ACCESS ROUTES TO THE PROJECT SITE.
13. AIRFIELD SHALL MEET ALL SAFETY AREA CRITERIA AND BE APPROVED BY THE ENGINEER BY 6:00 A.M. DAILY. FAILURE TO MAKE THE AIRFIELD OPERATIONAL BY 6:00 A.M. WILL RESULT IN LIQUIDATED DAMAGES PER GENERAL PROVISION 80-08.
14. PRIOR TO ACCEPTANCE AND OPENING OF AN AREA TO AIRCRAFT, ALL FINAL GRADING MUST BE COMPLETED. THIS INCLUDES ROCK REMOVAL, FINE GRADING, AND SEED PLACEMENT.
15. AIRFIELD PAVEMENT MARKINGS SHALL BE REMOVED TO CLOSED TAXIWAYS AND CONNECTORS. MARKINGS SHALL BE REINSTALLED PRIOR TO REOPENING TAXIWAYS AND CONNECTORS.
16. TEMPORARY SIDA AMENDMENT DOCUMENTATION AND WORK PLAN SHALL BE PREPARED AND SUBMITTED BY THE CONTRACTOR 90 DAYS PRIOR TO IMPLEMENTATION.
17. GATE GUARDS THAT ARE LOCATED ADJACENT TO THE SIDA BOUNDARY SHALL BE BADGED WITH SIDA ACCESS.

PHASING LEGEND

- FLAGGER
- AOA GATE ACCESS
- RUNWAY OR TAXIWAY CLOSURE MARKER
- TEMPORARY CONSTRUCTION MARKER PLACE 10 FEET OUTSIDE PHASE LIMITS OR AS DIRECTED BY ENGINEER.
- BUILDING
- CONTRACTOR STAGING/MATERIAL STORAGE AREA
- CONTRACTOR HAUL ROUTE
- AIRCRAFT TAXI ROUTE
- AIRPORT ACCESS ROUTE
- ARFF ROUTE
- X — CONSTRUCTION FLAGGING TAPE
- RSA — RUNWAY SAFETY AREA
- ROFA — RUNWAY OBJECT FREE AREA
- TSA — TAXIWAY SAFETY AREA
- TOFA — TAXIWAY OBJECT FREE AREA
- WETLAND

GRAPHIC SCALE
400 0 400 800
(IN FEET)

ISSUED FOR CONSTRUCTION

THESE DRAWINGS ARE FOR CONSTRUCTION USE AND ARE NOT A RECORD SET AS DEFINED BY LAW. THE RECORD SETS ARE SIGNED AND SEALED BY:

NAME	REG. NO.	DATE
JESSE DARRELL ERICKSON	41675	8/1/2016

FOR AND ON BEHALF OF JVIATION , INC.

L:\GUC\GUC-51 Rnwy Rehab\CAD\PLANS\
G00-GUC-51-G013-PHAS.dwg
Aug 1, 2017 - 2:42pm
Jesse.erickson

JVIATION®

Gunnison Crested Butte
REGIONAL AIRPORT

DES: T.A.R.
DR: L.O.B.
CH: C.L.G.
APP: J.D.E.

ISSUE RECORD

NO.	BY	DATE	DESCRIPTION
1	J.D.E.	8/1/2016	ISSUED FOR CONSTRUCTION
2	J.D.E.	8/1/2017	CHANGE ORDER NO. 1

REHABILITATE ASPHALT
RUNWAY 6/24

CONSTRUCTON SAFETY DRAWING
PHASE 6

AIP PROJ. NO. 3-08-0030-51
JVIATION PROJ. NO. 2014.GUC.05

SHEET NAME G013

SHEET NO. 13 of 80

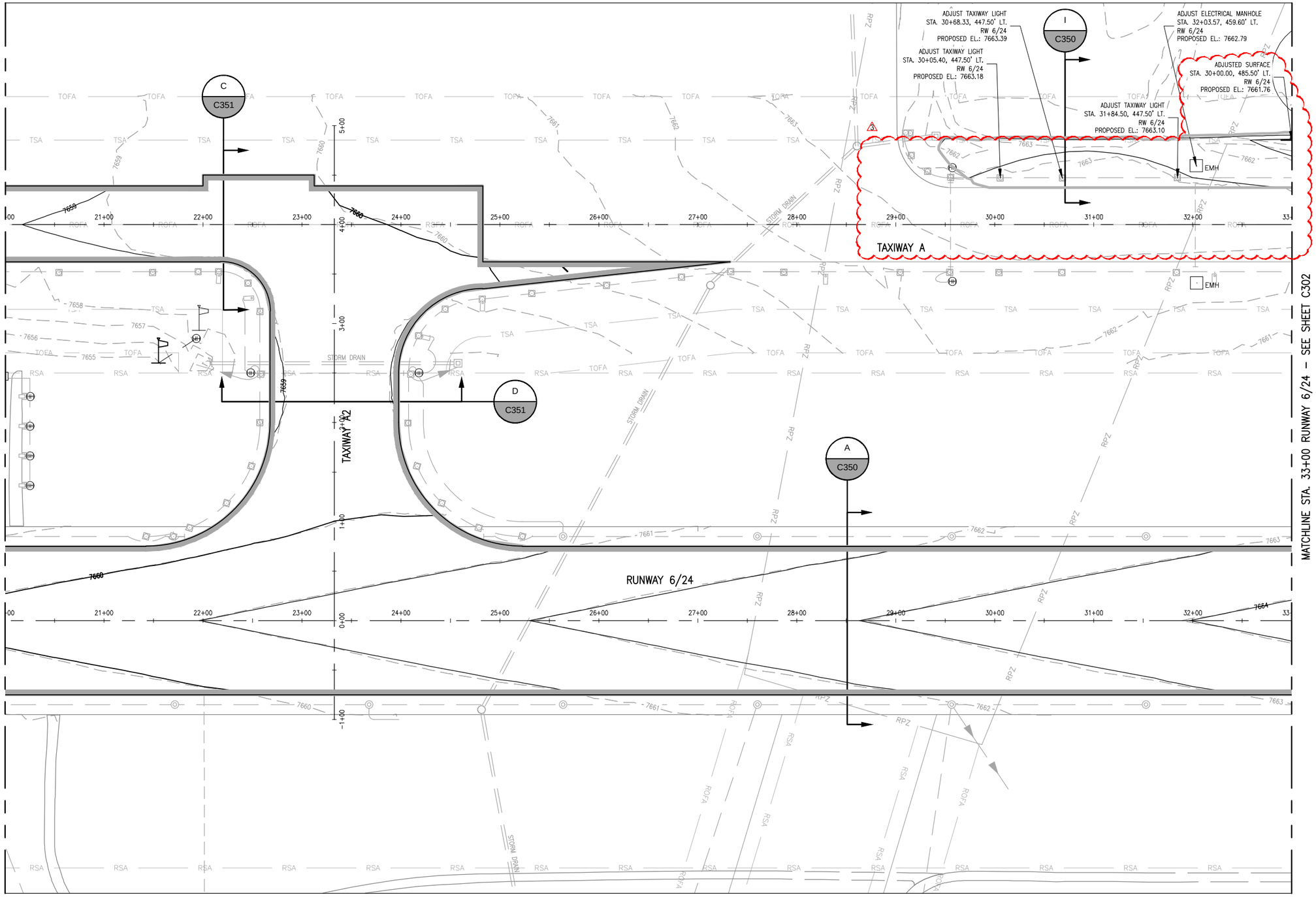

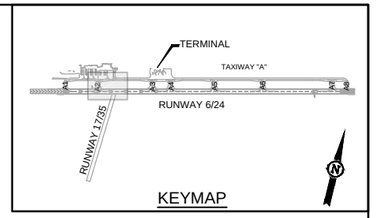

GRADING LEGEND

	PROPOSED PAVEMENT
6590	EXISTING INDEX CONTOUR
6589	EXISTING INTERMEDIATE CONTOUR
6590	PROPOSED INDEX CONTOUR
6589	PROPOSED INTERMEDIATE CONTOUR
	SWALE FLOW DIRECTION

NOTES:

1. THE CONTRACTOR SHALL RESTORE ALL AREAS DISTURBED BY HIS OPERATIONS OUTSIDE OF THE GRADING LIMITS AT HIS OWN EXPENSE. THIS INCLUDES, BUT IS NOT LIMITED TO, MINOR GRADING, TEMPORARY AND PERMANENT EROSION CONTROL MEASURES.
2. ENGINEER IDENTIFIED STAGING AREA, STOCKPILE AREAS, AND HAUL ROUTES SHALL BE RESTORED AS DESCRIBED ABOVE, AND AT THE DISCRETION OF THE ENGINEER. NO ADDITIONAL COST TO THE SPONSOR SHALL BE INCURRED FOR THESE WORK ITEMS.
3. SEE SHEETS C700 – C750 FOR EROSION CONTROL DETAILS.
4. CONTRACTOR TO PROTECT ALL EXISTING INLETS, MANHOLES, STORM STRUCTURES, PERIMETER ROADS NEAR CONSTRUCTION LIMITS.
5. CONTRACTOR TO PROTECT ALL EXISTING INLETS, MANHOLES, STORM STRUCTURES, PERIMETER ROADS NEAR CONSTRUCTION LIMITS.
6. PROPOSED CONTOURS REFLECT FINAL DESIGN ELEVATIONS. IN NON–PAVEMENT AREAS, FINAL ELEVATIONS SHALL INCLUDE DEPTH OF FINAL TOPSOIL LAYER.

REISSUE ENTIRE SHEET

GRAPHIC SCALE
50 0 50 100
(IN FEET)

ISSUED FOR CONSTRUCTION

THESE DRAWINGS ARE FOR CONSTRUCTION USE AND ARE NOT A RECORD SET AS DEFINED BY LAW. THE RECORD SETS ARE SIGNED AND SEALED BY:

NAME	REG. NO.	DATE
JESSE DARRELL ERICKSON	41675	8/1/2016

FOR AND ON BEHALF OF JVIATION , INC.

L:\GUC\GUC-51 Rwy Rehab\CAD\PLANS\
I:\03-GUC-51-C300-C309-GRAD.dwg
Aug 16, 2017 - 2:46pm
jesse.erickson

JVIATION®

Gunnison Crested Butte REGIONAL AIRPORT

DES: T.A.R.
DR: L.O.B.
CH: C.L.G.
APP: J.D.E.

ISSUE RECORD

NO.	BY	DATE	DESCRIPTION
1	J.D.E.	8/1/2016	ISSUED FOR CONSTRUCTION
2	J.D.E.	3/28/2017	FIELD DIRECTIVE NO. 2
3	J.D.E.	8/1/2017	CHANGE ORDER NO. 1

REHABILITATE ASPHALT
RUNWAY 6/24

GRADING PLAN
STA. 20+00 TO STA. 33+00
RUNWAY 6/24

AIP PROJ. NO. 3-08-0030-51

JVIATION PROJ. NO. 2014.GUC.05

SHEET NAME C301

SHEET NO. 34 of 80

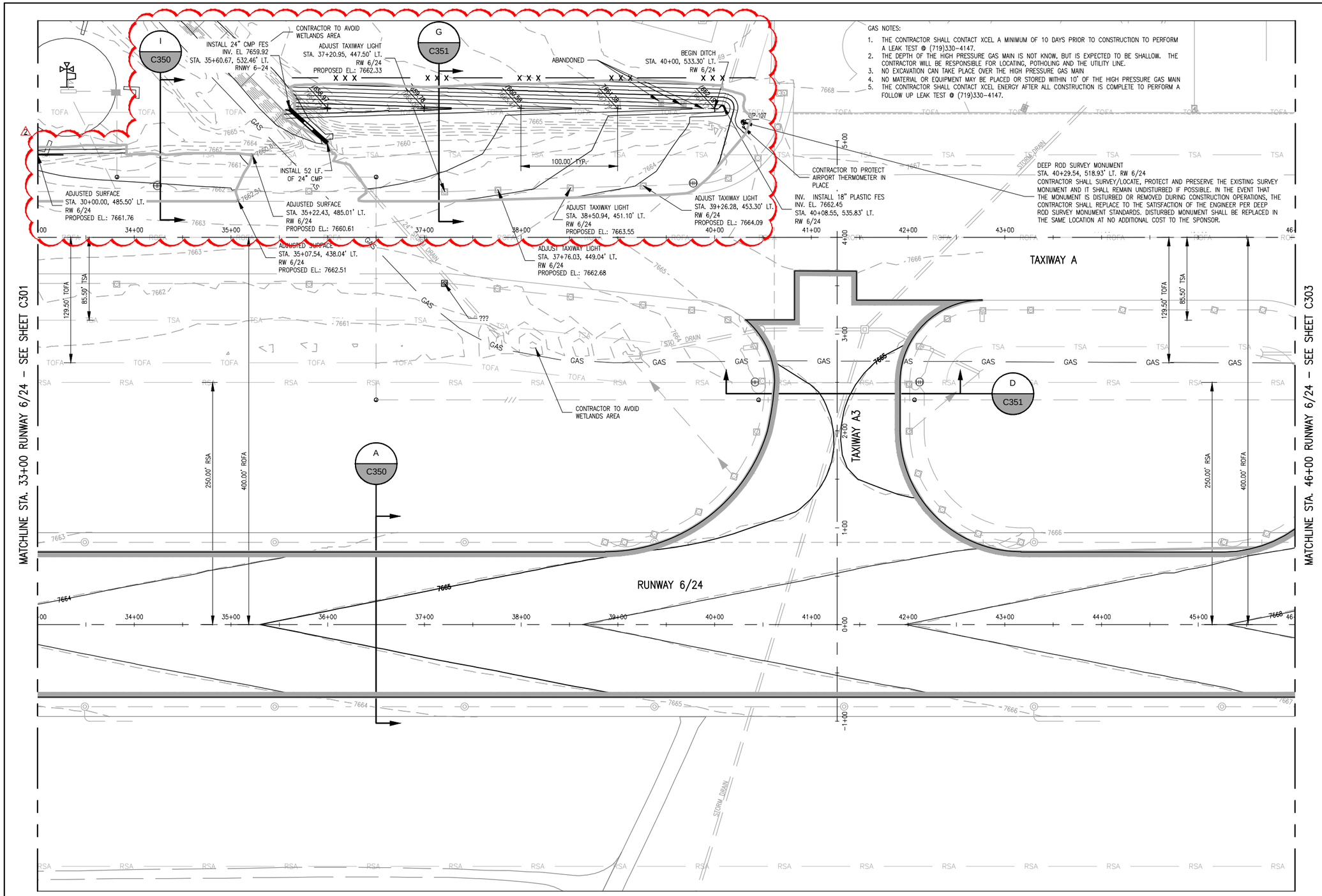

GAS NOTES:

1. THE CONTRACTOR SHALL CONTACT XCEL A MINIMUM OF 10 DAYS PRIOR TO CONSTRUCTION TO PERFORM A LEAK TEST @ (719)330-4147.
2. THE DEPTH OF THE HIGH PRESSURE GAS MAIN IS NOT KNOWN, BUT IS EXPECTED TO BE SHALLOW. THE CONTRACTOR WILL BE RESPONSIBLE FOR LOCATING, POTHOLING AND THE UTILITY LINE.
3. NO EXCAVATION CAN TAKE PLACE OVER THE HIGH PRESSURE GAS MAIN
4. NO MATERIAL OR EQUIPMENT MAY BE PLACED OR STORED WITHIN 10' OF THE HIGH PRESSURE GAS MAIN
5. THE CONTRACTOR SHALL CONTACT XCEL ENERGY AFTER ALL CONSTRUCTION IS COMPLETE TO PERFORM A FOLLOW UP LEAK TEST @ (719)330-4147.

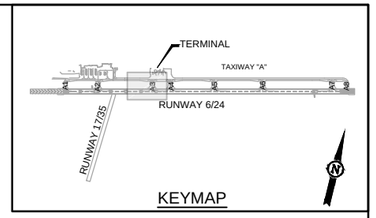

KEYMAP

GRADING LEGEND

	PROPOSED PAVEMENT
6590	EXISTING INDEX CONTOUR
6589	EXISTING INTERMEDIATE CONTOUR
6590	PROPOSED INDEX CONTOUR
6589	PROPOSED INTERMEDIATE CONTOUR
	SWALE FLOW DIRECTION

NOTES:

1. THE CONTRACTOR SHALL RESTORE ALL AREAS DISTURBED BY HIS OPERATIONS OUTSIDE OF THE GRADING LIMITS AT HIS OWN EXPENSE. THIS INCLUDES, BUT IS NOT LIMITED TO, MINOR GRADING, TEMPORARY AND PERMANENT EROSION CONTROL MEASURES.
2. ENGINEER IDENTIFIED STAGING AREA, STOCKPILE AREAS, AND HAUL ROUTES SHALL BE RESTORED AS DESCRIBED ABOVE, AND AT THE DISCRETION OF THE ENGINEER. NO ADDITIONAL COST TO THE SPONSOR SHALL BE INCURRED FOR THESE WORK ITEMS.
3. SEE SHEETS C700 – C750 FOR EROSION CONTROL DETAILS.
4. CONTRACTOR TO PROTECT ALL EXISTING INLETS, MANHOLES, STORM STRUCTURES, PERIMETER ROADS NEAR CONSTRUCTION LIMITS.
5. CONTRACTOR TO PROTECT ALL EXISTING INLETS, MANHOLES, STORM STRUCTURES, PERIMETER ROADS NEAR CONSTRUCTION LIMITS.
6. PROPOSED CONTOURS REFLECT FINAL DESIGN ELEVATIONS. IN NON-PAVEMENT AREAS, FINAL ELEVATIONS SHALL INCLUDE DEPTH OF FINAL TOPSOIL LAYER.

GRAPHIC SCALE
50 0 50 100
(IN FEET)

ISSUED FOR CONSTRUCTION

THESE DRAWINGS ARE FOR CONSTRUCTION USE AND ARE NOT A RECORD SET AS DEFINED BY LAW. THE RECORD SETS ARE SIGNED AND SEALED BY:

NAME	REG. NO.	DATE
JESSE DARRELL ERICKSON	41675	8/1/2016

FOR AND ON BEHALF OF JVIATION , INC.

L:\GUC\GUC-51 Rnwy Rehab\CAD\PLANS\
C00-GUC-51-C301-C309-GRAD.dwg
July 1, 2017 – 3:14pm
jesse.erickson

JVIATION®

Gunnison Crested Butte REGIONAL AIRPORT

DES: T.A.R.
DR: L.O.B.
CH: C.L.G.
APP: J.D.E.

ISSUE RECORD

NO.	BY	DATE	DESCRIPTION
1	J.D.E.	8/1/2016	ISSUED FOR CONSTRUCTION
2	J.D.E.	8/1/2017	CHANGE ORDER NO. 1

REHABILITATE ASPHALT
RUNWAY 6/24

GRADING PLAN
STA 33+00 TO STA. 46+00
RUNWAY 6/24

AIP PROJ. NO. 3-08-0030-51
JVIATION PROJ. NO. 2014.GUC.05

SHEET NAME C302

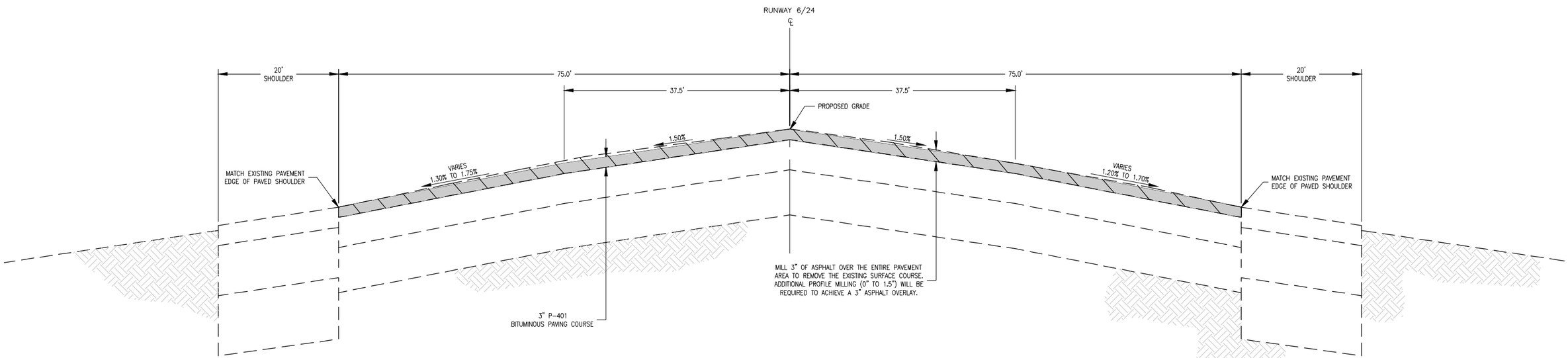

A
C300 - C307

RUNWAY 6/24
STA. 12+00 TO 106+00
N.T.S.

MILL NOTE

1. DEPTH OF ROTOMILLING VARIES FROM 0" TO 4.5". THE CONTRACTOR SHALL REMOVE THE 3" SURFACE COURSE WHERE INDICATED IN THE TYPICAL SECTIONS. CONTRACTOR SHALL USE PLAN/PROFILES AND SPOT ELEVATION SHEETS TO DETERMINE DEPTH OF MILLING TO ENSURE THAT NEW ASPHALT MAT THICKNESS MEET DEPTHS SHOWN ON TYPICAL SECTIONS. PAYMENT FOR MILLING WILL BE BASED ON SQUARE YARDAGE, REGARDLESS OF DEPTH. NO ADDITIONAL PAYMENT WILL BE MADE IF MULTIPLE PASSES WITH THE ROTOMILL ARE REQUIRED.

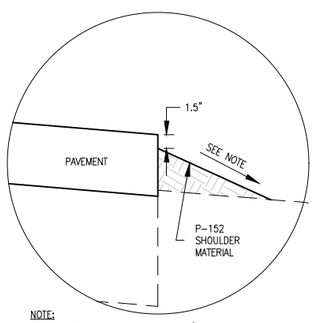

NOTE:
5% MAX TO EXISTING GRADE, OR 10' FROM PAVEMENT EDGE, WHICHEVER OCCURS FIRST. IF 5% TIE OUT TO 10' FROM PAVEMENT EDGE DOES NOT MEET EXISTING GRADE, THE CONTRACTOR SHALL GRADE SLOPE AT 3% TO EXISTING GRADE BEYOND 10' FROM PAVEMENT EDGE.

1
C350, C351

PAVEMENT EDGE DETAIL
N.T.S.

2

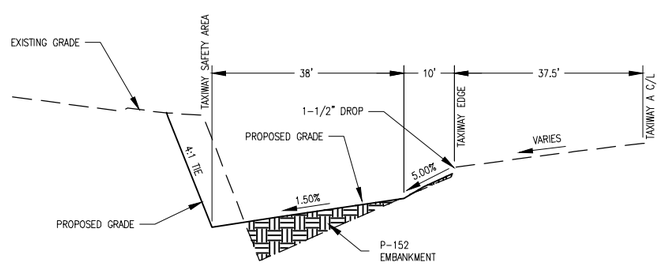

I
C350, C351

TAXIWAY SAFETY AREA GRADING
N.T.S.

ISSUED FOR CONSTRUCTION

THESE DRAWINGS ARE FOR CONSTRUCTION USE AND ARE NOT A RECORD SET AS DEFINED BY LAW. THE RECORD SETS ARE SIGNED AND SEALED BY:

NAME	REG. NO.	DATE
JESSE DARRELL ERICKSON	41675	8/1/2016

FOR AND ON BEHALF OF JVIATION , INC.

L:\GUC\GUC-51 Rwy Rehab\CAD\PLANS\
028-GUC-51-C350-C353-TSEC.dwg
Mar 14, 2017 - 3:51pm
jesse.erickson

JVIATION®

Gunnison Crested Butte REGIONAL AIRPORT

DES: T.A.R.
DR: L.O.B.
CH: C.L.G.
APP: J.D.E.

ISSUE RECORD

NO.	BY	DATE	DESCRIPTION
1	J.D.E.	8/1/2016	ISSUED FOR CONSTRUCTION
2	J.D.E.	8/1/2017	CHANGE ORDER NO. 1

REHABILITATE ASPHALT RUNWAY 6/24

TYPICAL SECTIONS

AIP PROJ. NO. 3-08-0030-51

JVIATION PROJ. NO. 2014.GUC.05

SHEET NAME C350

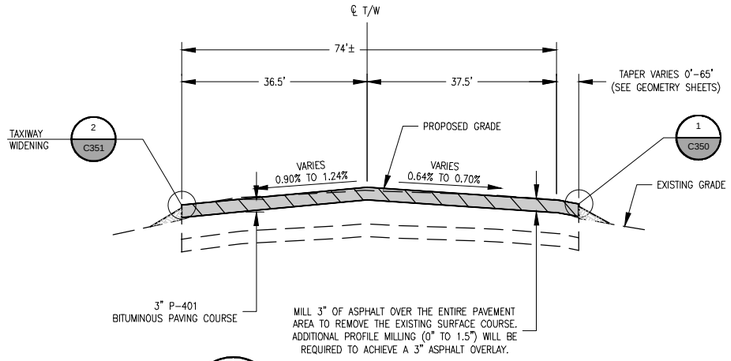

B / C300 — TAXIWAY A WITH WIDENING
STA. 13+85 TO 16+75
N.T.S.

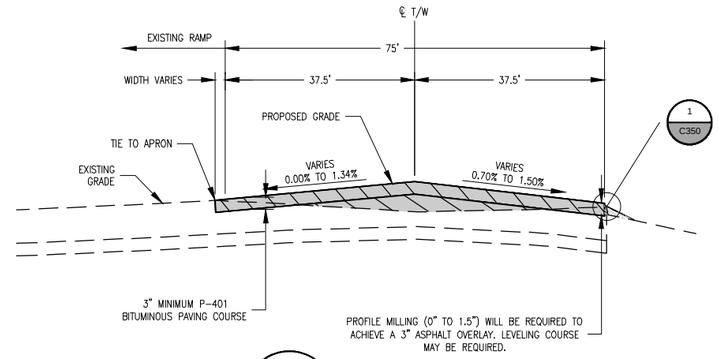

C / C300, C301 — TAXIWAY A & BUMP OUT
STA. 16+75 TO 24+82.5
N.T.S.

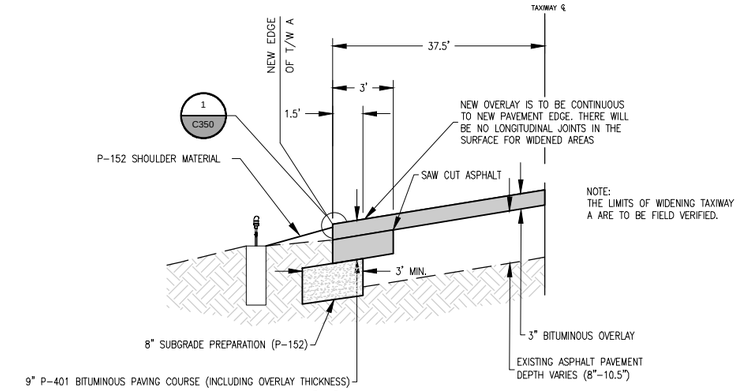

2 / C351 — TAXIWAY A WIDENING
N.T.S.

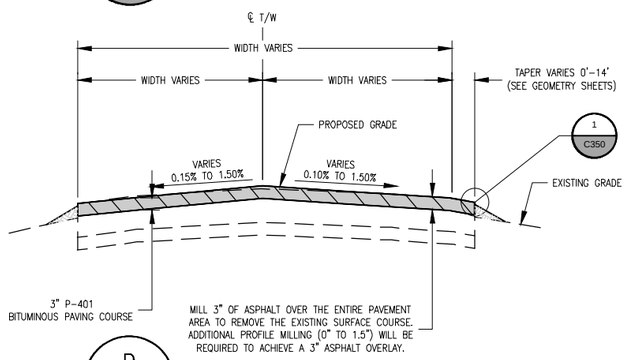

D / C301, C302, C304, C305, C307 — CROWNED CONNECTOR TAXIWAYS
N.T.S.

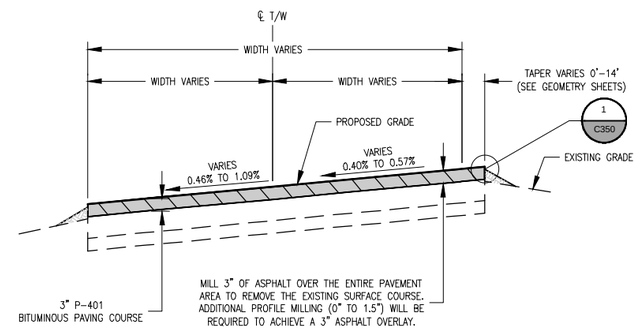

E / C300, C301, C307 — TRANSVERSE CONNECTOR TAXIWAYS
N.T.S.

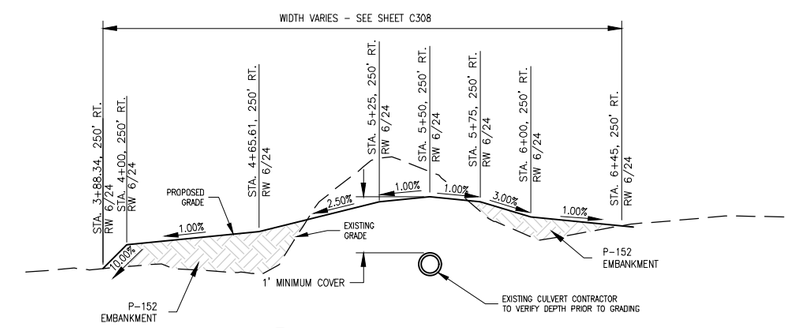

H / C308 — RUNWAY SAFETY AREA GRADING
N.T.S.

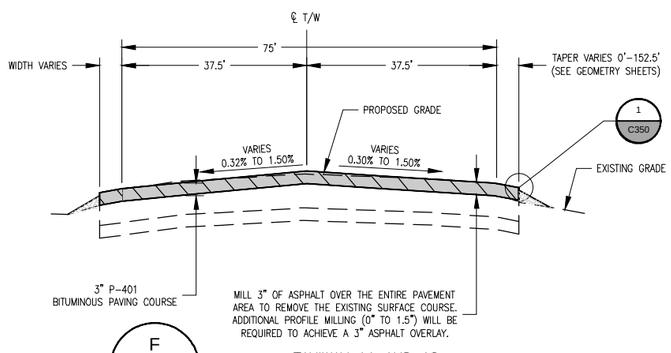

F / C300 — TAXIWAY A1 AND A8
STA. 9+75 TO 13+85 (TAXIWAY A1)
STA. 106+43 TO 109+00 (TAXIWAY A8)
N.T.S.

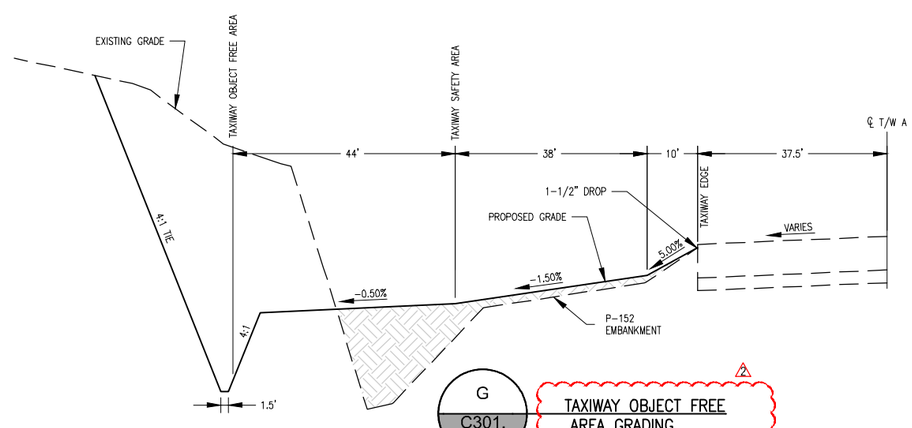

G / C301, C302 — TAXIWAY OBJECT FREE AREA GRADING
N.T.S.

ISSUED FOR CONSTRUCTION

THESE DRAWINGS ARE FOR CONSTRUCTION USE AND ARE NOT A RECORD SET AS DEFINED BY LAW. THE RECORD SETS ARE SIGNED AND SEALED BY:

NAME	REG. NO.	DATE
JESSE DARRELL ERICKSON	41675	8/1/2016

FOR AND ON BEHALF OF JVIATION , INC.

L:\GUC\GUC-51 Rwy Rehab\CAD\PLANS\
C05-GUC-51-C350-C353-TSEC.dwg
Aug 14, 2017 - 3:52pm
jesse.erickson

JVIATION®

Gunnison Crested Butte REGIONAL AIRPORT

DES: T.A.R.
DR: L.O.B.
CH: C.L.G.
APP: J.D.E.

ISSUE RECORD

NO.	BY	DATE	DESCRIPTION
1	J.D.E.	8/1/2016	ISSUED FOR CONSTRUCTION
2	J.D.E.	8/1/2017	CHANGE ORDER NO. 1

REHABILITATE ASPHALT RUNWAY 6/24

TYPICAL SECTIONS

AIP PROJ. NO. 3-08-0030-51

JVIATION PROJ. NO. 2014.GUC.05

SHEET NAME C351

SHEET NO. 43 of 80

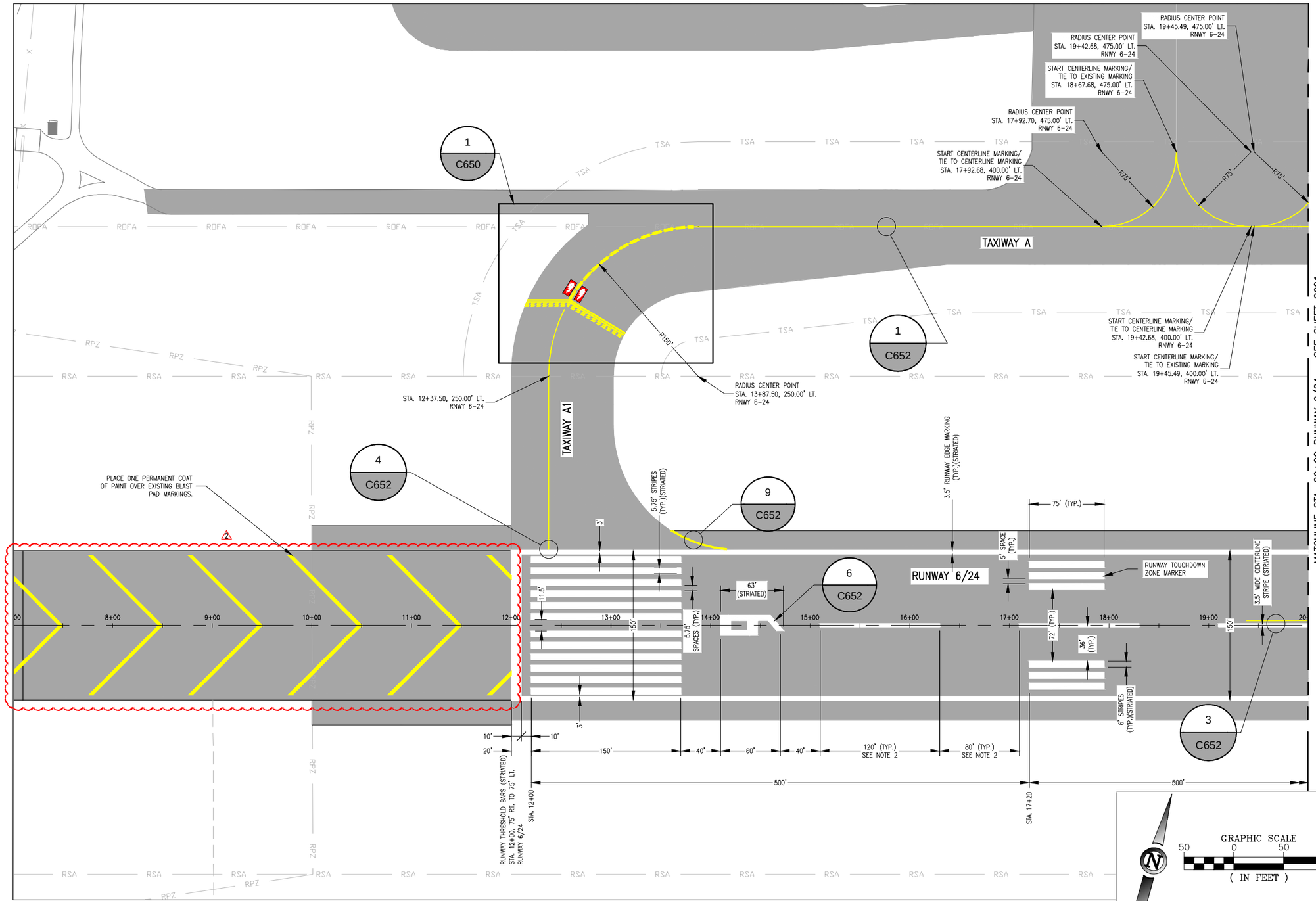

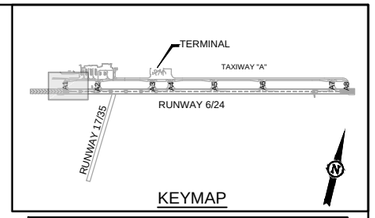

KEYMAP

STRIPING LEGEND

- EXISTING RUNWAY/TAXIWAY PAINT
- PROPOSED TAXIWAY PAINT

NOTES

1. UNLESS OTHERWISE SPECITIED, ALL TAXIWAY MARKINGS SHALL BE YELLOW AND ALL RUNWAY MARKINGS SHALL BE WHITE IN ACCORD WITH SPECIFICATION P-620.
2. ADJUST RUNWAY CENTERLINE STRIPE AND SPACING BETWEEN STRIPES AT CENTER OF RUNWAY TO ACCOMMODATE RUNWAY LENGTH. THE SPACING SHALL BE AS SHOWN ON SHEETS C603 & C604.
3. CONTRACTOR WILL BE REQUIRED TO REPAINT ANY MARKINGS THAT ARE OUTSIDE THE PROJECT WORK LIMITS WHICH ARE DAMAGED BY THE CONTRACTORS OPERATIONS. REPAINTING OF THESE DAMAGE AREAS WILL BE AT THE CONTRACTORS EXPENSE.
4. PAINT SHOULD BE STORED IN A CLIMATE-CONTROLLED ENVIRONMENT IN ORDER TO MEET MANUFACTURES RECOMMENDED TEMPERATURES BEFORE IT IS APPLIED. MATERIAL THAT DOES NOT MEET REQUIRED TEMPERATURE REQUIREMENTS WILL BE WARMED TO THE MINMUM TEMPERATURE FOR 24 HOURS BEFORE IT IS APPLIED OR AS APPROVED BY THE RESIDENT ENGINEER.
5. PERMANENT APPLICATION OF PAINT WILL BE APPLIED 30 DAYS AFTER THE INITIAL TEMPORARY APPLICATION. RATES OF APPLICATION SHALL BE AS SPECIFIED IN SECTION P-620
6. GLASS BEADS SHALL BE APPLIED TO ALL TEMPORARY AND PERMANENT PAVEMENT MARKING. APPLICATION RATES AND GLASS BEAD TYPE SHALL BE AS SPECIFIED IN ITEM P-620. GLASS BEADS SHALL NOT BE APPLIED TO BLACK PAINT.
7. SEE SHEET C650 - C652 FOR STRIPING DETAILS.
8. RUNWAY MARKINGS HAVE PRECEDENCE OVER THE TAXIWAY LEAD IN LINES ON CENTERLINE MARKINGS.
9. CONTRACTOR CONTRACTOR SHALL HAVE A COPY OF THE CURRENT FAA ADVISORY CIRCULAR AC 150/5340-1L "STANDARDS FOR AIRPORT MARKINGS" ON SITE AT ALL TIMES. ANY DISCREPANCY BETWEEN BETWEEN INFORMATION SHOWN ON THE PLAN SHEETS AND THE ADVISORY CIRCULAR SHALL BE COORDINATED WITH THE ENGINEER FOR DIRECTION.
10. ANY DISCREPANCIES BETWEEN THESE PLANS AND THE ACTUAL STRIPING PRESENT IN THE FIELD SHALL BE BROUGHT TO THE ATTENTION OF THE RESIDENT ENGINEER.
11. BLACK PAINT WILL BE REQUIRED FOR OUTLINES ON ALL PROPOSED AIRFIELD MARKINGS AS WELL AS THE SPACES BETWEEN STRIATED PAINT. BLACK PAINT WILL BE APPLIED PRIOR TO PLACING THE SECOND APPLICATION OF WHITE OR YELLOW PAINT.
12. PAINT OBLITERATION SHALL BE ACCOMPLISHED BY WATER OR SAND BLASTING OF ANOTHER APPROVED METHOD. TEMPORARY MARKINGS REMOVAL REQUIRED FOR COORDINATION OF PHASES MAY BE ACCOMPLISHED BY PAINTING OVER THE EXISTING MARKINGS WITH BLACK PAINT.
13. NO OBLITERATION OF MARKINGS ARE REQUIRED INSIDE PAVEMENT REMOVAL LIMITS.
14. ANY DAMAGE DONE DURING MARKING OBLITERATION, OPERATIONS TO PAVEMENTS OR PAVEMENT JOINT/CRACK SEALS SHALL BE REPAIRED BY THE CONTRACTOR, AT HIS EXPENSE, AND TO THE APPROVAL OF THE ENGINEER.

MATCHLINE STA. 20+00 RUNWAY 6/24 — SEE SHEET C601

GRAPHIC SCALE
50 0 50 100
(IN FEET)

ISSUED FOR CONSTRUCTION

THESE DRAWINGS ARE FOR CONSTRUCTION USE AND ARE NOT A RECORD SET AS DEFINED BY LAW. THE RECORD SETS ARE SIGNED AND SEALED BY:

NAME	REG. NO.	DATE
JESSE DARRELL ERICKSON	41675	8/1/2016

FOR AND ON BEHALF OF JVIATION , INC.

L:\GUC\GUC-51 Rnwy Rehab\CAD\PLANS\
660-GUC-51-C600-C607-PNT.dwg
Aug 1, 2017 - 3:17pm JvMgrn
jesse.erickson

JVIATION®

Gunnison Crested Butte REGIONAL AIRPORT

DES: T.A.R.
DR: L.O.B.
CH: C.L.G.
APP: J.D.E.

ISSUE RECORD

NO.	BY	DATE	DESCRIPTION
1	J.D.E.	8/1/2016	ISSUED FOR CONSTRUCTION
2	J.D.E.	8/1/2017	CHANGE ORDER NO. 1

REHABILITATE ASPHALT RUNWAY 6/24

PAVEMENT MARKING PLAN
STA. 7+00 TO STA. 13+00
RUNWAY 6/24

AIP PROJ. NO. 3-08-0030-51

JVIATION PROJ. NO. 2014.GUC.05

SHEET NAME C600

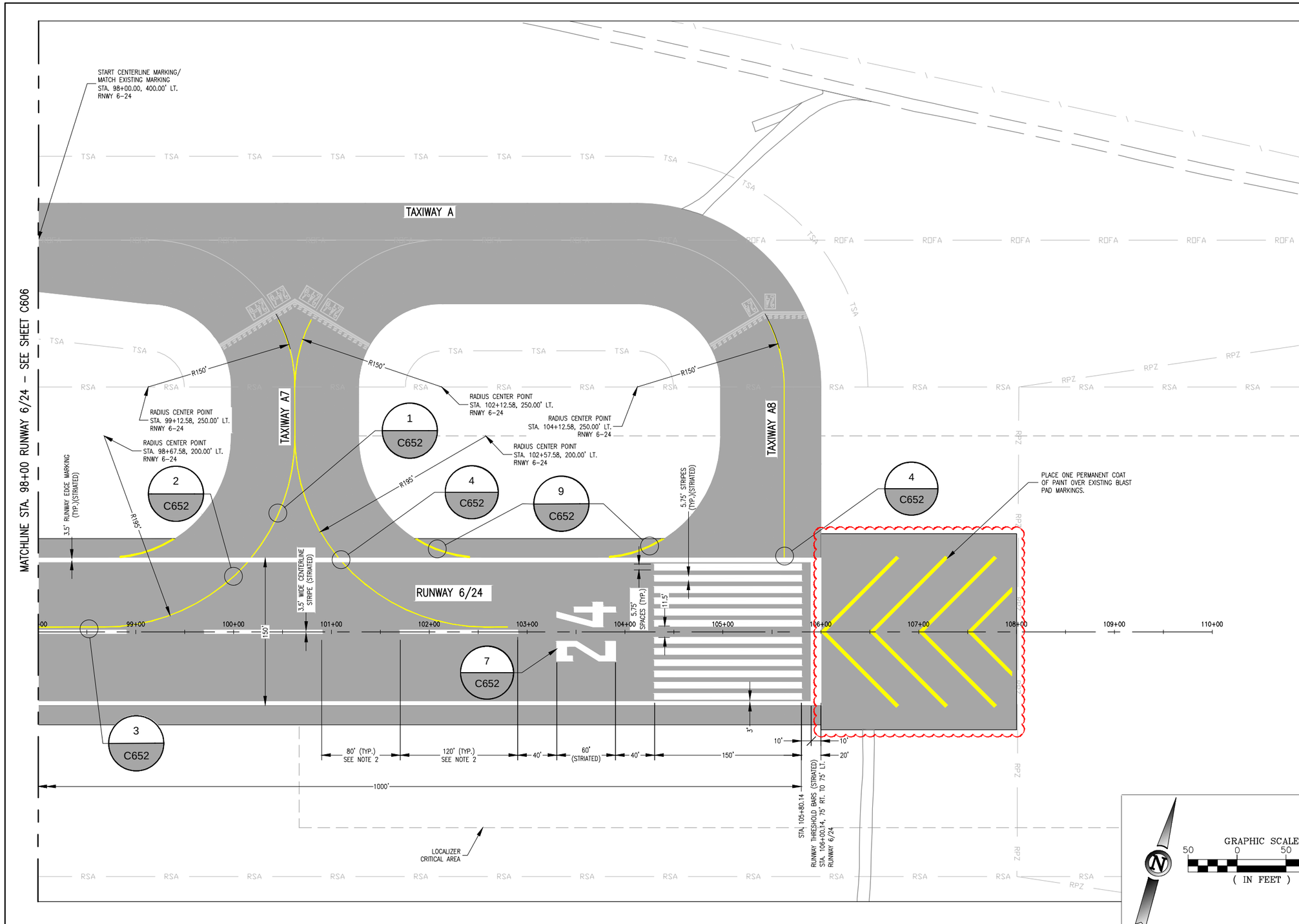

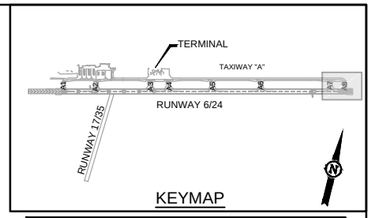

KEYMAP

STRIPING LEGEND

- EXISTING RUNWAY/TAXIWAY PAINT
- PROPOSED TAXIWAY PAINT

NOTES

1. UNLESS OTHERWISE SPECITIED, ALL TAXIWAY MARKINGS SHALL BE YELLOW AND ALL RUNWAY MARKINGS SHALL BE WHITE IN ACCORD WITH SPECIFICATION P-620.
2. ADJUST RUNWAY CENTERLINE STRIPE AND SPACING BETWEEN STRIPES AT CENTER OF RUNWAY TO ACCOMMODATE RUNWAY LENGTH. THE SPACING SHALL BE AS SHOWN ON SHEETS C603 & C604.
3. CONTRACTOR WILL BE REQUIRED TO REPAINT ANY MARKINGS THAT ARE OUTSIDE THE PROJECT WORK LIMITS WHICH ARE DAMAGED BY THE CONTRACTORS OPERATIONS. REPAINTING OF THESE DAMAGE AREAS WILL BE AT THE CONTRACTORS EXPENSE.
4. PAINT SHOULD BE STORED IN A CLIMATE-CONTROLLED ENVIRONMENT IN ORDER TO MEET MANUFACTURES RECOMMENDED TEMPERATURES BEFORE IT IS APPLIED. MATERIAL THAT DOES NOT MEET REQUIRED TEMPERATURE REQUIREMENTS WILL BE WARMED TO THE MINMUM TEMPERATURE FOR 24 HOURS BEFORE IT IS APPLIED OR AS APPROVED BY THE RESIDENT ENGINEER.
5. PERMANENT APPLICATION OF PAINT WILL BE APPLIED 30 DAYS AFTER THE INITIAL TEMPORARY APPLICATION. RATES OF APPLICATION SHALL BE AS SPECIFIED IN SECTION P-620
6. GLASS BEADS SHALL BE APPLIED TO ALL TEMPORARY AND PERMANENT PAVEMENT MARKING. APPLICATION RATES AND GLASS BEAD TYPE SHALL BE AS SPECIFIED IN ITEM P-620. GLASS BEADS SHALL NOT BE APPLIED TO BLACK PAINT.
7. SEE SHEET C650 – C652 FOR STRIPING DETAILS.
8. RUNWAY MARKINGS HAVE PRECEDENCE OVER THE TAXIWAY LEAD IN LINES ON CENTERLINE MARKINGS.
9. CONTRACTOR CONTRACTOR SHALL HAVE A COPY OF THE CURRENT FAA ADVISORY CIRCULAR AC 150/5340-1L "STANDARDS FOR AIRPORT MARKINGS" ON SITE AT ALL TIMES. ANY DISCREPANCY BETWEEN BETWEEN INFORMATION SHOWN ON THE PLAN SHEETS AND THE ADVISORY CIRCULAR SHALL BE COORDINATED WITH THE ENGINEER FOR DIRECTION.
10. ANY DISCREPANCIES BETWEEN THESE PLANS AND THE ACTUAL STRIPING PRESENT IN THE FIELD SHALL BE BROUGHT TO THE ATTENTION OF THE RESIDENT ENGINEER.
11. BLACK PAINT WILL BE REQUIRED FOR OUTLINES ON ALL PROPOSED AIRFIELD MARKINGS AS WELL AS THE SPACES BETWEEN STRIATED PAINT. BLACK PAINT WILL BE APPLIED PRIOR TO PLACING THE SECOND APPLICATION OF WHITE OR YELLOW PAINT.
12. PAINT OBLITERATION SHALL BE ACCOMPLISHED BY WATER OR SAND BLASTING OF ANOTHER APPROVED METHOD. TEMPORARY MARKINGS REMOVAL REQUIRED FOR COORDINATION OF PHASES MAY BE ACCOMPLISHED BY PAINTING OVER THE EXISTING MARKINGS WITH BLACK PAINT.
13. NO OBLITERATION OF MARKINGS ARE REQUIRED INSIDE PAVEMENT REMOVAL LIMITS.
14. ANY DAMAGE DONE DURING MARKING OBLITERATION, OPERATIONS TO PAVEMENTS OR PAVEMENT JOINT/CRACK SEALS SHALL BE REPAIRED BY THE CONTRACTOR, AT HIS EXPENSE, AND TO THE APPROVAL OF THE ENGINEER.

GRAPHIC SCALE
50 0 50 100
(IN FEET)

ISSUED FOR CONSTRUCTION

THESE DRAWINGS ARE FOR CONSTRUCTION USE AND ARE NOT A RECORD SET AS DEFINED BY LAW. THE RECORD SETS ARE SIGNED AND SEALED BY:

NAME	REG. NO.	DATE
JESSE DARRELL ERICKSON	41675	8/1/2016

FOR AND ON BEHALF OF JVIATION , INC.

L:\GUC\GUC-51 Rwy Rehab\CAD\PLANS\
060-GUC-51-C600-C607-PNT.dwg
Aug 16, 2017 - 4:01pm
jesse.erickson

JVIATION®

Gunnison Crested Butte REGIONAL AIRPORT

DES: T.A.R.
DR: T.A.R.
CH: C.L.G.
APP: J.D.E.

ISSUE RECORD

NO.	BY	DATE	DESCRIPTION
1	J.D.E.	8/1/2016	ISSUED FOR CONSTRUCTION
2	J.D.E.	8/1/2017	CHANGE ORDER NO. 1

REHABILITATE ASPHALT
RUNWAY 6/24

PAVEMENT MARKING PLAN
STA. 98+00 TO STA. 111+00
RUNWAY 6/24

AIP PROJ. NO. 3-08-0030-51

JVIATION PROJ. NO. 2014.GUC.05

SHEET NAME C607

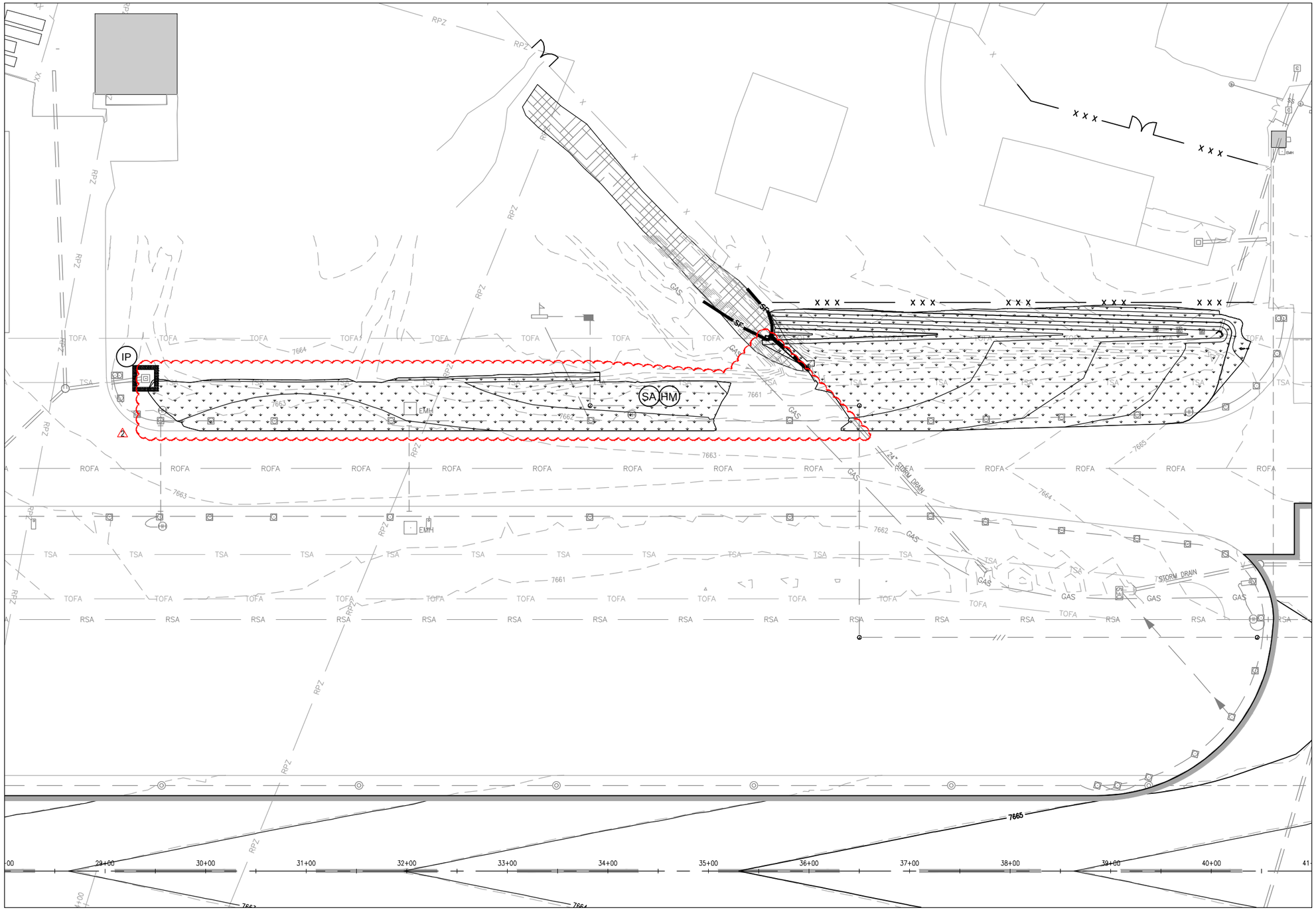

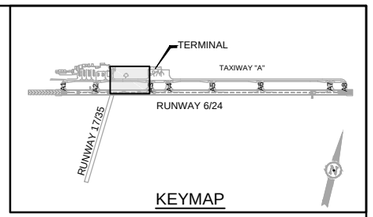

KEYMAP

EROSION LEGEND

IP CP	STORM DRAIN INLET/CULVERT PROTECTION
SF	SILT FENCE
SA HM	SEEDED AREA WITH HYDRO MULCH
	WETLANDS

NOTES:

1. SEE EROSION CONTROL DETAILS ON SHEET C751.
2. SEEDING AND MULCHING WILL BE PROVIDED ON ALL DISTURBED SLOPES UP TO 4:1. SLOPES GREATER THAN 4:1 WILL BE SEEDED AND STABILIZED WITH EROSION CONTROL BLANKETS AS PART OF THIS PROJECT.
3. SILT FENCE AS SHOWN IN SHEETS C700 THRU C702 ARE THE MINIMUM AMOUNT THAT ARE REQUIRED TO PROTECT SENSITIVE AREAS. ANY ADDITIONAL MEASURES THAT ARE REQUIRED TO MEET THE REQUIREMENTS OF THE CONTRACTOR'S STORM WATER QUALITY PERMIT SHALL BE INCIDENTAL TO THE PROJECT COST. THESE ADDITIONAL MEASURES WILL NOT BE PAID FOR UNLESS DIRECTED BY THE ENGINEER.

GRAPHIC SCALE
50 0 50 100
(IN FEET)

ISSUED FOR CONSTRUCTION

THESE DRAWINGS ARE FOR CONSTRUCTION USE AND ARE NOT A RECORD SET AS DEFINED BY LAW. THE RECORD SETS ARE SIGNED AND SEALED BY:

NAME	REG. NO.	DATE
JESSE DARRELL ERICKSON	41675	8/1/2016

FOR AND ON BEHALF OF JVIATION , INC.

L:\GUC\GUC-51 Rwy Rehab\CAD\PLANS\
0701-GUC-51-C700-C703-EROS.dwg
Aug 1, 2016 7:41:16pm
jesse.erickson

JVIATION®

Gunnison Crested Butte REGIONAL AIRPORT

DES: T.A.R.
DR: L.O.B.
CH: C.L.G.
APP: J.D.E.

ISSUE RECORD

NO.	BY	DATE	DESCRIPTION
1	J.D.E.	8/1/2016	ISSUED FOR CONSTRUCTION
2	J.D.E.	8/1/2017	CHANGE ORDER NO. 1

REHABILITATE ASPHALT RUNWAY 6/24

EROSION CONTROL PLAN
TAXIWAY A SHOULDER GRADING
STA. 29+40 TO STA. 41+00 RUNWAY 6/24

AIP PROJ. NO. 3-08-0030-51
JVIATION PROJ. NO. 2014.GUC.05

SHEET NAME C702

SHEET NO. 72 of 80