2019 REAL PROPERTY NOTICE OF DETERMINATION

Gunnison County COLORADO

Kristy McFarland
Gunnison County Assessor
221 N Wisconsin St, Suite A
Gunnison, CO 81230

Date of Notice: August 15, 2019
Phone: (970) 641-1085
Fax: (970) 641-7920
Email: assessor@gunnisoncounty.org
Website: http://www.gunnisoncounty.org/assessor.html

ACCOUNT NUMBER	TAX YEAR	TAX AREA	PARCEL NUMBER
R007958	2019	601	3517-220-00-001

PROPERTY OWNER	LEGAL DESCRIPTION
HEMMINGHAUS COLORADO TRUST OF 2011 C/O COVENANT MUTI FAMILY OFFICES LLC 18756 STONE OAK PKWY STE 102A SAN ANTONIO, TX 782584100	14.42A TRACT IN NE4NW4. SEC 22 51N1E #614664

PROPERTY CLASSIFICATION	PROPERTY OWNER'S ESTIMATE OF VALUE	ASSESSOR'S VALUATION	
		ACTUAL VALUE PRIOR TO REVIEW	ACTUAL VALUE AFTER REVIEW
Residential Received County Administration 9/16/19 + 9/17/19		1,438,720	1,438,720
TOTALS		$1,438,720	$1,438,720

The Assessor has carefully studied all the available information, giving particular attention to the specifics included on your protest. The Assessor's determination of value after review is based on the following:

The actual value of the property is determined by appropriate consideration of the approaches to appraisal set forth in § 39-1-103(5)(a), C.R.S.

Upon further review, I have determined the value is supported by sales of properties with similar attributes.

If you disagree with the Assessor's decision, you have the right to appeal to the County Board of Equalization for further consideration, § 39-8-106(1)(a), C.R.S.

The deadline for filing real property and personal property appeals is September 15.

The Assessor establishes property values. The local taxing authorities (county, school district, city, fire protection, and other special districts) set mill levies. The mill levy requested by each taxing authority is based on a projected budget and the property tax revenue required to adequately fund the services it provides to its taxpayers. The local taxing authorities hold budget hearings in the fall. If you are concerned about mill levies, we recommend that you attend these budget hearings. Please refer to last year's tax bill or ask your Assessor for a listing of the local taxing authorities.

Please refer to the reverse side of this notice for additional information.

CBOE # 344

APPEAL PROCEDURES

County Board of Equalization Hearings will be held from September 1 through November 1 at Gunnison County Courthouse or Blackstock Government Center.

To appeal the Assessor's decision, complete the Petition to the County Board of Equalization shown below, and mail or deliver a copy of both sides of this form to:

Gunnison County Board of Equalization
200 E Virginia Ave
Gunnison, CO 81230
(970) 641-0248

Received
County Administration
9/16/19

To preserve your appeal rights, your Petition to the County Board of Equalization must be postmarked or delivered on or before **September 15 for real property and personal property** – after such date, your right to appeal is lost. You may be required to prove that you filed a timely appeal; therefore, we recommend that all correspondence be mailed with proof of mailing.

You will be notified of the date and time scheduled for your hearing. The County Board of Equalization must mail a written decision to you within five business days following the date of the decision. The County Board of Equalization must conclude hearings and render decisions by November 1, § 39-8-107(2), C.R.S. If you do not receive a decision from the County Board of Equalization and you wish to continue your appeal, you must file an appeal with the Board of Assessment Appeals by December 8, § 39-2-125(1)(e), C.R.S.

If you are dissatisfied with the County Board of Equalization's decision and you wish to continue your appeal, you must appeal within 30 days of the date of the County Board's written decision to ONE of the following:

Board of Assessment Appeals
1313 Sherman Street, Room 315
Denver, CO 80203
(303) 866-5880
www.dola.colorado.gov/baa

District Court
Contact the District Court in the county where the property is located. See your local phone book for the address and telephone number.

Binding Arbitration
For information about binding arbitration, contact the County Board of Equalization at the address above.

If the date for filing any report, schedule, claim, tax return, statement, remittance, or other document falls upon a Saturday, Sunday, or legal holiday, it shall be deemed to have been timely filed if filed on the next business day, § 39-1-120(3), C.R.S.

PETITION TO COUNTY BOARD OF EQUALIZATION

What is your estimate of the property's value as of June 30, 2018? (Your opinion of value in terms of a specific dollar amount is required for real property pursuant to § 39-8-106(1.5), C.R.S.)

$ 1,200,000

What is the basis for your estimate of value or your reason for requesting a review? (Please attach additional sheets as necessary and any supporting documentation, i.e., comparable sales, rent roll, original installed cost, appraisal, etc.)

Fairness, in comparison with similar properties along East River in Almont. Since there have been no comparable sales in the prior 2 or more years, I respectfully request you consider the attached data.

ATTESTATION

I, the undersigned owner or agent* of the property identified above, affirm that the statements contained herein and on any attachments hereto are true and complete.

Signature: Roger R. Hammingh[illegible]
Roger R. Hamminghaus

Telephone Number: 210-288-8000

Date: 9/14/19

*Attach letter of authorization signed by property owner.

Acct # R007958

9/14/19

Appeal re: Appraisal and Assessment
on Residential Property
Acct No. R007958
Parcel No 3517-220-00-001
Location 665 East River Lane Almont

Gunnison County Board of Equalization
200 E. Virginia Ave
Gunnison Co 81230

Ladies & Gentlemen:

I respectfully appeal the current 2019 assessment on the above subject property of $1,438,720, primarily on the basis of inequal or unfair increase of 35% versus the 2017/18 appraisal and 114% increase since the 2011/12 appraisal. These increase compare to neighboring properties of -4% to 5.8% versus the prior appraisals and -16% to 38% versus their 2011/12 appraisals. A comparison of these appraisal and assessment values is attached as Table 1. We have not made any significant improvement or structural changes to the subject property within the last 10 years. We do take pride in maintaining a good appearance for the landscaping and the structures, as our neighbors also do.

Possible reason for the high appraisal maybe

- The "effective year built" assessment of 2000. I hope attachment 2 of the 3 major construction events occurred much earlier: original cabin foundation and its exterior structure was built in 1959; the original foundation and much of the external structure of about 1100 sq ft is still incorporated in the center of the home, quality of this structure/construction could best be described as "Fair". (45% of total home today) In 1995 we added about 1,963 sq feet of bedroom and bath 2 story structure. quality of construction could best be described as low average: No central heating (just 2 fireplaces and electric base boards) and very poor insulation around the windows.
  In early 2002 853 sq feet (~19% of home today) of good quality construction was added and 1684 sq ft of the living area was either remodeled or added in the in the original 1959 cabin area.
- Using the rough measurements shown in the appraisal sheet, I calculate a total of 4556 sq ft, slightly less than in the appraisal.
- I would assess the interior and exterior of home today as average not good as in the appraisal since we are having to replace rotting wood in

EXHIBIT A3
Page 3 of 3

columns and exterior decks and no interior painting, carpet changes or updates have occurred since the 2002 remodeling.

Thank you for your considering my/our request to lower our appraisal. I may be reached at 210-288-800 (cell) if you have any questions or need clarification. Although we will be back in Tx next week, we can arrange through Chs Russell, our caretaker for you to inspect the property.

Sincerely
Roger Hemminghaus
Roger R. Hemminghaus

My apologies for the hand writing... obviously I don't use a computer... IPad is the best can do!

TABLE 1

All 4 properties ajoin one to another along East River in ALMONT
All 4 are residential, year round privately maintained and have some of above avg view ¢

Address / Acct No.	665 East River Ln R007958	597 East River Ln R030864	585 East River Ln R009225	11075 Highway 135 R040238
2019 Info				
Land Actual	$468,180	$161,000	$322,000	$21,490
Building	970,540	483,460	545,550	832,510
ACTUAL TOTAL	$1,438,720	644,460	867,550	854,000
Land Assessed	33,470	11,510	23,020	2,040
Assd Building	69,390	34,570	39,010	59,520
ASSESSED TOTAL	102,860	46,080	62,030	61,560
2019 vs 2018/17 APPRAISAL INCREASE	Actual $369,920 / Assessed $25,900	Actual −22,390 / Assessed −1,930	Actual −19,920 / Assessed −1,870	Actual 52,000 / Assessed 3,390
Prior Years	Actual / Assessed			
2018				
2017	$1,068,800 / $76,960	666,850 / 48,010	887,470 / 63,900	801,270 / 58,170
2016				
2015	1,404,690 / 111,810	631,750 / 50,290	936,740 / 74,570	946,410 / 75,770
2014				
2013	962,320 / 76,610	373,590 / 29,740	570,820 / 45,430	684,450 / 54,890
2012				
2011	671,160 / 53,430	498,280 / 37,660	784,300 / 62,430	555,940 / 44,620
Assessed Increase				
% Versus 2018/17	33.7%	−4%	−2.9%	5.8%
% Versus 2011/12	92.5%	−16%	0.7%	38%

EXHIBIT B Page 1 of 1

DRT 9/10/19

EXHIBIT C
Page 1 of 1

Sketches

Attachment 2

665 East River Dr, Alvord,

New built additions in 2002

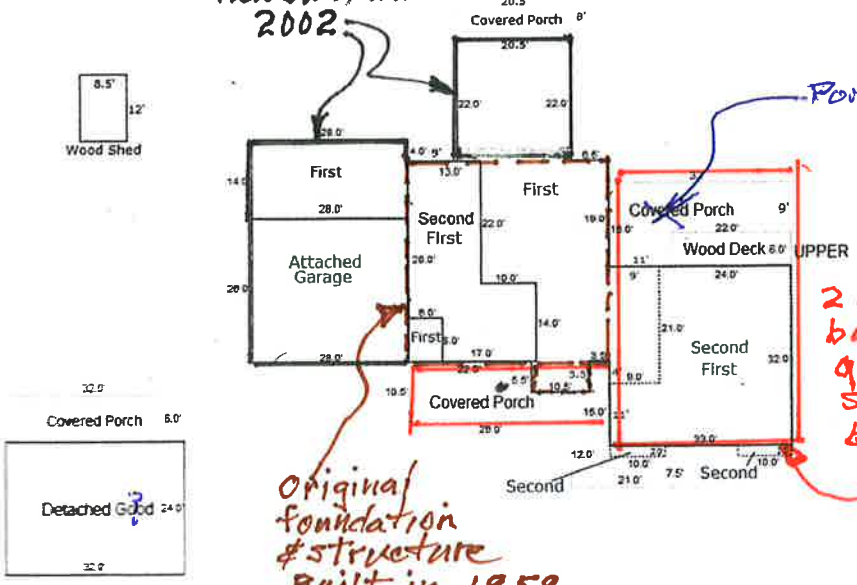

Porch is not covered

2 story addition built 1995 for quick bed & bath space. Never been remodled

Original foundation & structure Built in 1959 Remodled 2002

9/14/19

EXHIBIT D
Page 1 of 2

qPublic.net™ Gunnison County, CO

Summary

Account Number	R007958
Parcel Number	3517-220-00-001
Account Type	Residential
Economic Area	Econ Area 8
Tax District	601
Mill Levy	55.788
Property Location	665 E RIVER LN, ALMONT
Neighborhood	ALMONT AREA
LEA	RIVER ALMONT (80140)
Subdivision	N/A
Condo	N/A
Legal Description	14.42A TRACT IN NE4NW4. SEC 22 51N1E #614664
Parcel Notes	TOTAL PARCEL = 14.42 AC WATER RIGHTS B751 P428

View Map

Note: Legal Description above is abbreviated for use on Assessor records and is not valid for use on legal documents.

Owner

Owner	Business Name
HEMMINGHAUS COLORADO TRUST OF 2011 C/O COVENANT MUTI FAMILY OFFICES LLC 18756 STONE OAK PKWY STE 102A SAN ANTONIO, TX 78258-4100	

Current Assessment Information

		2019
+	Land Actual Value	$468,180
+	Building Actual Value	$970,540
=	Total Actual Value	$1,438,720
+	Land Assessed Value	$33,470
+	Building Assessed Value	$69,390
=	Total Assessed Value	$102,860

Prior Year Assessment Information

Year	Actual Value	Assessed Value	Mill Levy	Ad Valorem Taxes
2018	$1,068,880	$76,960	55.788	$4,293.44
2017	$1,068,880	$76,960	56.488	$4,347.29
2016	$1,404,690	$111,810	56.272	$6,291.76
2015	$1,404,690	$111,810	55.585	$6,214.98
2014	$962,320	$76,610	56.853	$4,355.51
2013	$962,320	$76,610	50.446	$3,864.67
2012	$671,160	$53,430	44.797	$2,393.49
2011	$671,160	$53,430	44.988	$2,403.71
2010	$1,091,850	$86,910	41.575	$3,613.28
2009	$1,074,350	$85,510	40.414	$3,455.80
2008	$1,308,460	$104,160	42.029	$4,377.76
2007	$1,308,460	$104,160	36.828	$3,836.00
2006	$1,005,200	$80,010	44.434	$3,555.16

Contact the Treasurer's Office for current property tax amount due. Do not use the figures above to pay outstanding property taxes.

Land

Land Description	Land Type	Acres	Site Access	Electricty	Sewer	Water	Other Attributes
SINGLE FAM.RES.-LAND	Residential	14.42	YEAR AROUND PRIVATELY MAINTAINED IMPROVED DIRT OR GRAVEL ROAD	INSTALLED	ISDS SEPTIC SYSTEM INSTALLED	WELL INSTALLED	LAND TYPE PRIMARY - RIVER SITE IMPROVEMENTS - AVERAGE FENCING TREE TYPE - ASPEN TREE TYPE - COTTONWOOD TREE TYPE - EVERGREEN TREE TYPE - PINON JUNIPER LAND TYPE SECONDARY - TREE VIEWS - SCENIC OR ABOVE AVERAGE

Sales and Conveyance

Sale Date	Sale Amount	Adjusted Sales Price	Grantor	Grantee	Vacant or Improved (at time of sale)	Reception #	Deed Type
9/1/1994	$360,000	$360,000	Unknown	Unknown	Improved	B000751P000426-1	GEN WARR DEED - FEE

Buildings

Building Number	1
Building Description	CONVENTION
Occupancy Type	CONVENTIONAL
Original Year Built	1959
Effective Year Built	2000
Percent Complete	100%
Quality of Construction	Good
Exterior Condition	Good
Interior Condition	Good
Bedrooms	4
Bathrooms	4
Stories	2
Roof	Seamed Metal - Painted
Exterior	Logs - Full
Foundation	Concrete
Windows	Good
Primary Heating System	
Domestic Hot Water	
Landscaping	Above Average
Above-grade Living Area	4,720 sqft
Finished Basement	
Unfinished Basement	
Garage	1,497 sqft

Generate Owner List by Distance

Distance:

100

Feet

Show address of: Owner Property

Download format:

Address labels (5160)

International mailing labels that exceed 5 lines are not supported on the Address labels (5160). For international addresses, please use the xlsx, csv or tab download formats.

Download

Additional owner options:

All Owners

Additional mailing label options:

Show parcel id on label

Skip labels:

0

Recent Sales In Area

Recent Sales in Area

Photos

EXHIBIT D
Page 2 of 2

Sketches

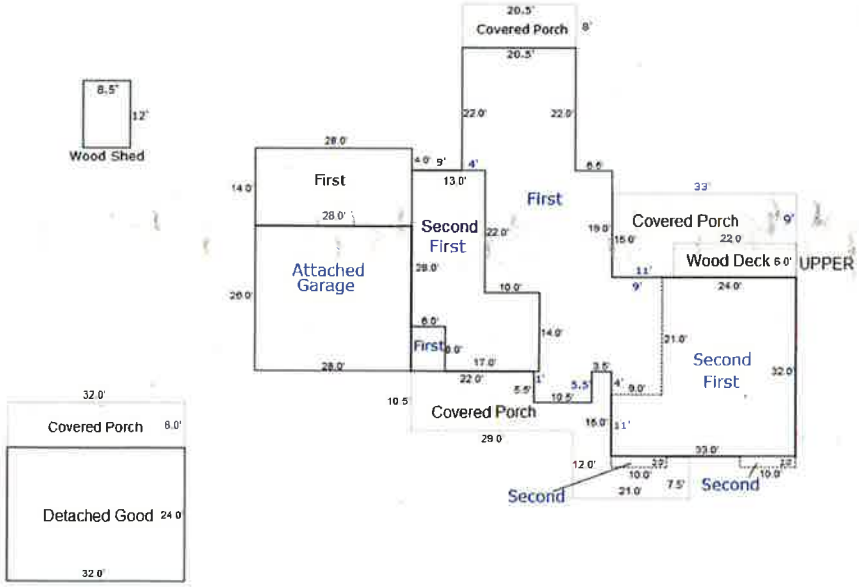

Sketch by Apex Sketch

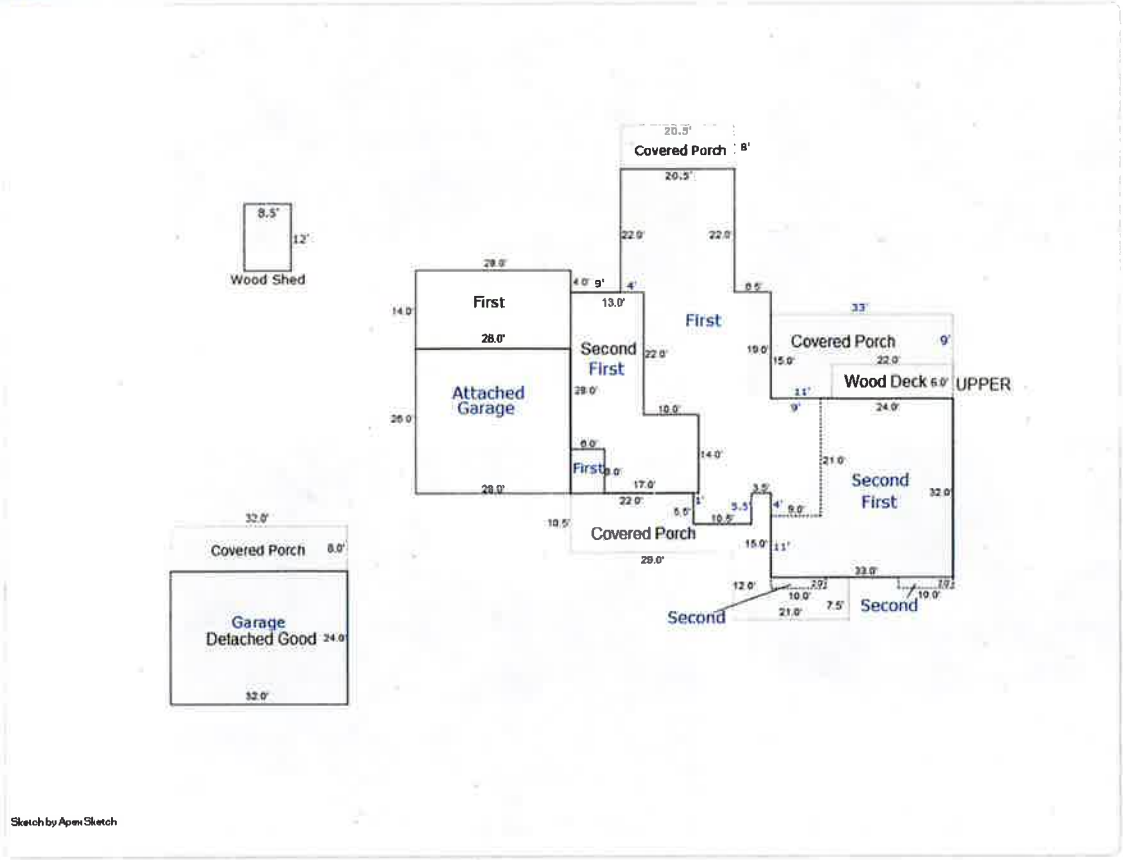

The Gunnison County Assessor's Office makes every effort to produce the most accurate information possible. No warranties, expressed or implied, are provided for the data herein, its use or interpretation. All assessment information is subject to change before the next certified tax roll.
User Privacy Policy
GDPR Privacy Notice

Developed by Schneider GEOSPATIAL

Last Data Upload: 9/5/2019, 11:27:37 PM

Version 2.3.3

R Kommingshaus
P.O. Box 260
Almont, Co. 81210

CBOE # 344

Gunnison County Board of Equilization
200 E Virginia Ave
Gunnison, CO 81230

91230 2248 C001

CBOE #344

EXHIBIT E
Page 1 of 3

9/14/19

Supplemental Data in support of appeal on appraisal on 665 East River Ln, Elmont.

Please add the following facts:

- As best I can read the County Assessor's graph (copy enclosed), median residential sales prices in Economic Area 6 for 2016-2018 are up 22% compared to my 35% assessment increase. And I assume County data includes new builds of higher quality such as in Wilder.

Received
County Administration
9/16/19
ADD'L DOCUMENTATION RECEIVED

The assessment of my square footage for above grade living is $205/sq ft compared to my very comparable neighbor at 585 East River Ln assessment of $161/sq ft, due I assume to an erroneous ~~comparison~~ relative assumption on effective year built and quality of construction and current interior and exterior conditions. Our effective year built should be prior to 2000 and qualities & conditions average, same as 585 E River Ln

Transition

9/14/19

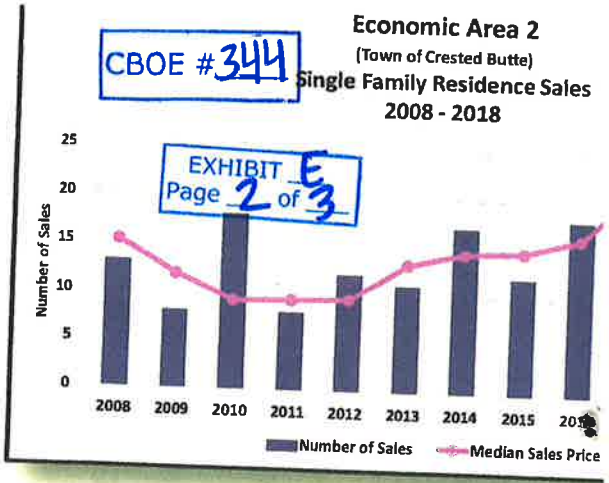

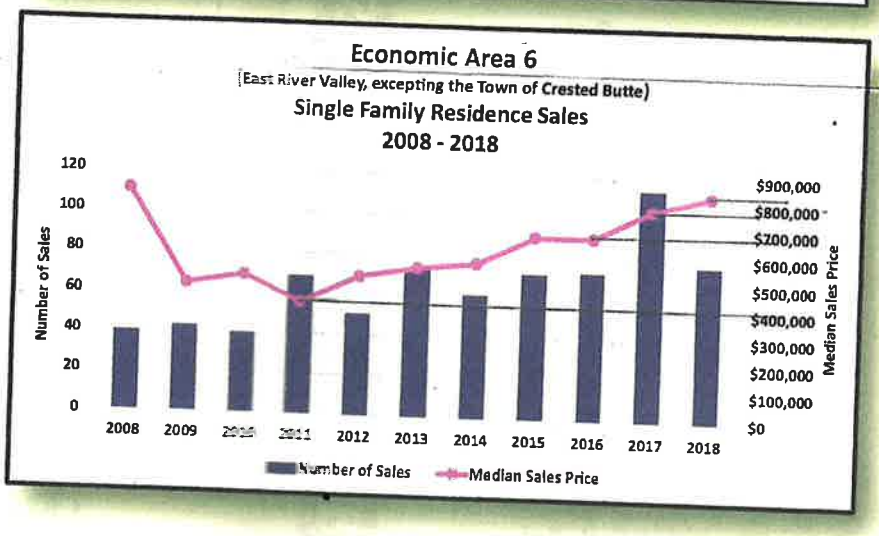

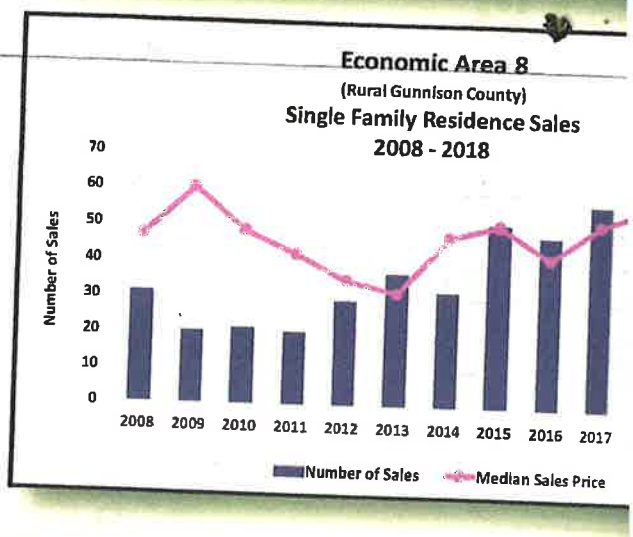

valley than
unty's
ianufactured
nd manufac-
sales price
Gunnison

2017, the
16. In May
ment rate.
ial property

FREQUENTLY ASKED QUESTIONS

Q HOW CAN MY ASSESSMENT OR VALUE CHANGE WHEN I HAVEN'T DONE ANYTHING TO MY PROPER

A While a property may not have been updated and characteristics remain the same, the property value is t sell for as of the current appraisal date. Real estate values are influenced by numerous external economic, and physical factors. As property values change in the market place, those changes must be reflected on t word 'improvement' is an appraisal term that refers to a structure that is on a property, and does not imply been improved since the last reassessment.

Q IF I BOUGHT MY HOUSE DURING THE STUDY PERIOD, SHOULDN'T THE VALUE BE THE SAME AS WHA

A One sale alone does not determine market value. For consistency and equalization purposes, all neighbor considered when establishing a level of value. Your sales transaction is verified and then will be considered similar properties, as long as it is an arm's-length, open market transaction.

Q WHY DOES THE ASSESSOR'S OFFICE USE MEDIAN VALUES INSTEAD OF AVERAGE?

A When you have a set of values, for example the sales prices of single family homes in Gunnison County, the value closest to the middle of the set. This means that half of the values in the set will be greater than the m them will be less. On the other hand, the average (or "mean") is the sum of all the values added together di of values in the set. Whenever there's a wide range of variability in a set of values, such as a lot of extremely the median is not affected by the outliers and so it makes for a more accurate measure of "middleness" than Remember, when Bill Gates walks into a bar full of people, the average wealth of the patrons becomes millio median wealth doesn't change...

County Board of Equalization Hearings will be held from September 1 through November 1 at Gunnison County Courthouse or Blackstock Government Center.

To appeal the Assessor's decision, complete the Petition to the County Board of Equalization shown below, and mail or deliver a copy of both sides of this form to:

Gunnison County Board of Equalization
200 E Virginia Ave
Gunnison, CO 81230
(970) 641-0248

CBOE #344

EXHIBIT E
Page 3 of 3

To preserve your appeal rights, your Petition to the County Board of Equalization must be postmarked or delivered on or before **September 15 for real property and personal property** – after such date, your right to appeal is lost. You may be required to prove that you filed a timely appeal; therefore, we recommend that all correspondence be mailed with proof of mailing.

You will be notified of the date and time scheduled for your hearing. The County Board of Equalization must mail a written decision to you within five business days following the date of the decision. The County Board of Equalization must conclude hearings and render decisions by November 1, § 39-8-107(2), C.R.S. If you do not receive a decision from the County Board of Equalization and you wish to continue your appeal, you must file an appeal with the Board of Assessment Appeals by December 8, § 39-2-125(1)(e), C.R.S.

If you are dissatisfied with the County Board of Equalization's decision and you wish to continue your appeal, you must appeal within 30 days of the date of the County Board's written decision to ONE of the following:

Board of Assessment Appeals
1313 Sherman Street, Room 315
Denver, CO 80203
(303) 866-5880
www.dola.colorado.gov/baa

District Court
Contact the District Court in the county where the property is located. See your local phone book for the address and telephone number.

Binding Arbitration
For information about binding arbitration, contact the County Board of Equalization at the address above.

If the date for filing any report, schedule, claim, tax return, statement, remittance, or other document falls upon a Saturday, Sunday, or legal holiday, it shall be deemed to have been timely filed if filed on the next business day, § 39-1-120(3), C.R.S.

PETITION TO COUNTY BOARD OF EQUALIZATION

What is your estimate of the property's value as of June 30, 2018? (Your opinion of value in terms of a specific dollar amount is required for real property pursuant to § 39-8-106(1.5), C.R.S.)

$ 1,200,000

What is the basis for your estimate of value or your reason for requesting a review? (Please attach additional sheets as necessary and any supporting documentation, i.e., comparable sales, rent roll, original installed cost, appraisal, etc.)

Fairness, in comparison with similar properties along East Rivers in Almont. Since there have been no comparable sales in the prior 2 or more years, I respectfully request you consider the attached data.

ATTESTATION

I, the undersigned owner or agent* of the property identified above, affirm that the statements contained herein and on any attachments hereto are true and complete.

Signature: [signature]

Telephone Number: 210-288-8000

Date: 9/14/19

*Attach letter of authorization signed by property owner.

Acct # R007958

Hemmingham
PO Box 260
Almont, Co, 81210

DENVER CO 802
14 SEP 2019 PM 5 L

FOREVER
USA

CBOE # 344

Received
County Administration
9/16/19
(MAILED SEPARATELY)

Gunnison County Board of Equalization
2000 E. Virginia Ave
Gunnison, CO 81230